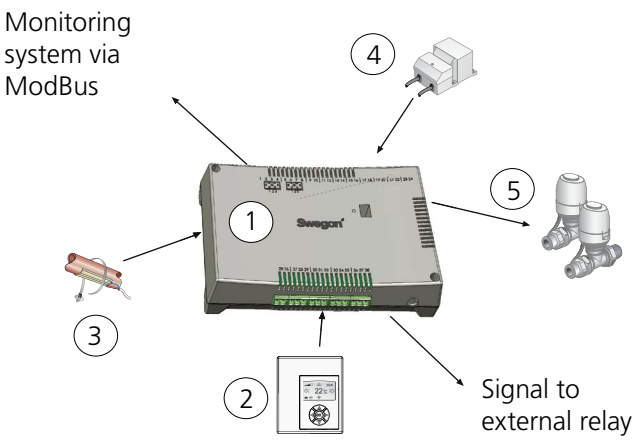

Figure 1. CONDUCTOR W1: Integral Components

1	*Controller*	*Conductor RE*
2	*Room unit*	*Conductor RU*
3	*Condensation sensor*	*SYST CG*
4	*Transformer*	*SYST TS-1*
5	*Valve actuator*	*LUNA a AT-2*

Room unit	RJ12	Modulare Contact
MODBUS RS2	1	Data (B)
	2	Data (A)
	3	Earth
MODBUS RS1	5	Data (B)
	6	Data (A)
	7	Earth
Condensation sensor	17	Resistance
	18	
Temperature detector	19	KTY
	20	
Transformer	23	+ 24V AC
	24	-G0
Valve actuator, cooling	27	-G0
	29	+24V
Valve actuator, heating	30	-G0
	32	+24V

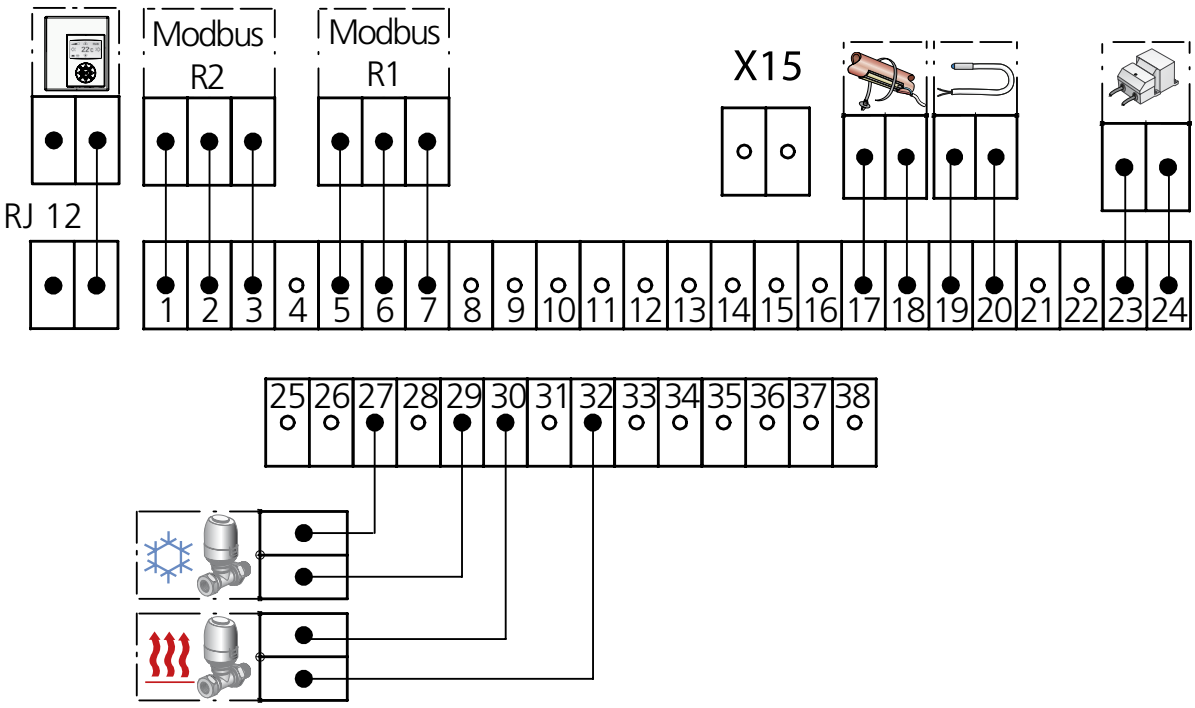

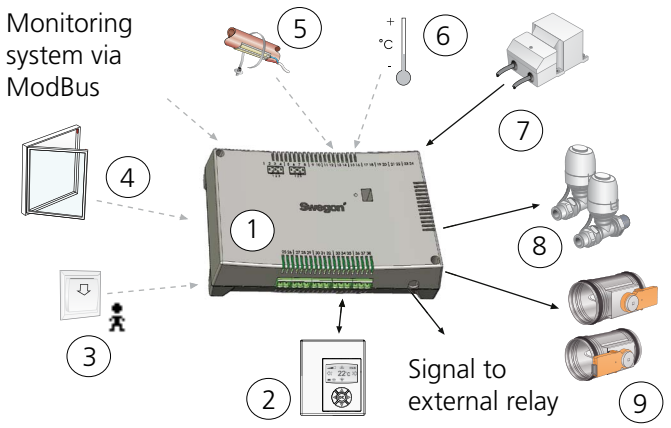

1	*Controller*	*Conductor RE*
2	*Room unit*	*Conductor RU*
3	*Key card/presence detector*	*SYST SENSO/DETECT Occupancy*
4	*Window contact*	
5	*Condensation sensor*	*SYST CG*
6	*External temp. sensor*	*CONDUCTOR T-TG*
7	*Transformer*	*SYST TS-1*
8	*Valve actuator*	*LUNA a AT-2*
9	*Ventilation damper incl. damper actuator*	*CRTc-aaa-2 (aaa = dimension)*

Room unit	RJ12	Modulare Contact
MODBUS RS2	1	Data (B)
	2	Data (A)
	3	Earth
MODBUS RS1	5	Data (B)
	6	Data (A)
	7	Earth
Condensation sensor	17	Resistance
	18	
Temperature detector	19	KTY
	20	
Transformer	23	+ 24V AC
	24	-G0
Window contact	25	10V
	10	10V
Card reader	26	10V
	12	10V
Valve actuator, cooling	27	-G0
	29	+24V
Valve actuator, heating	30	-G0
	32	+24V
Damper, supply air	33	-G0
	34	0-10V
	35	+24V
Damper, extract air	36	-G0
	37	0-10V
	38	+24V

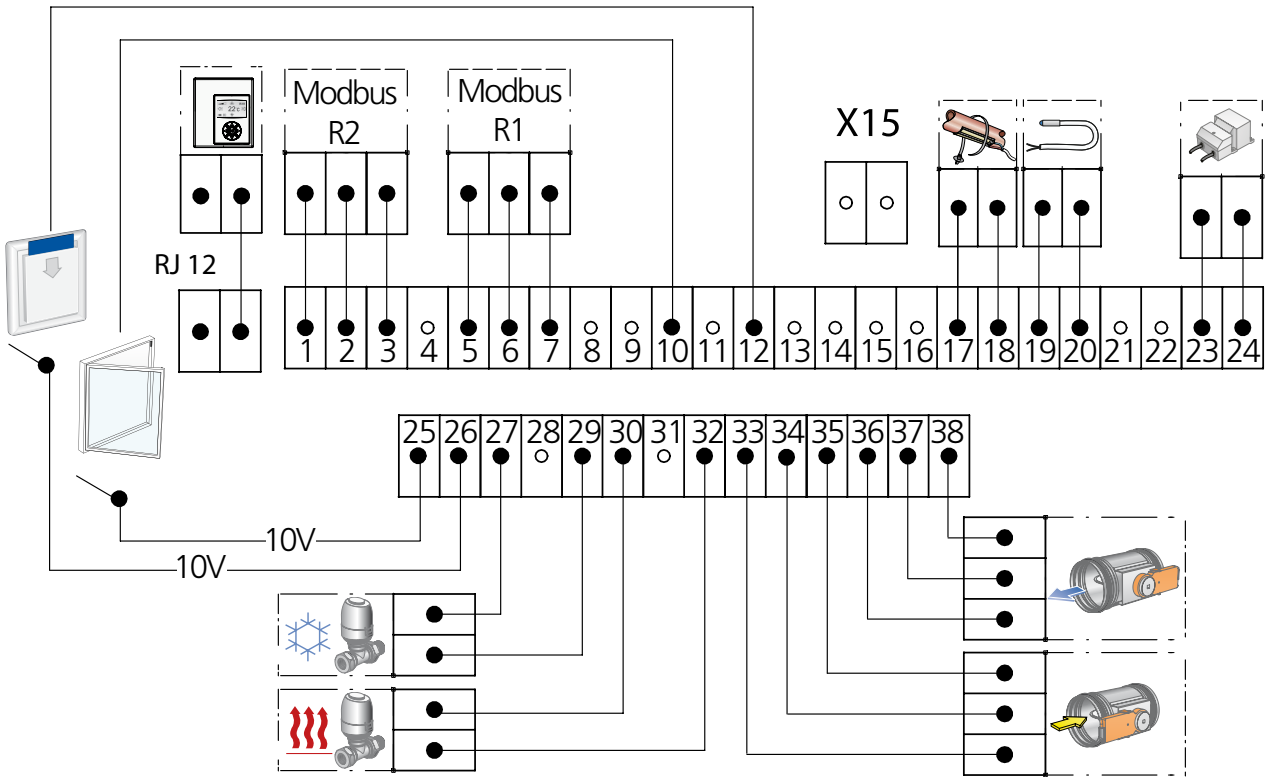

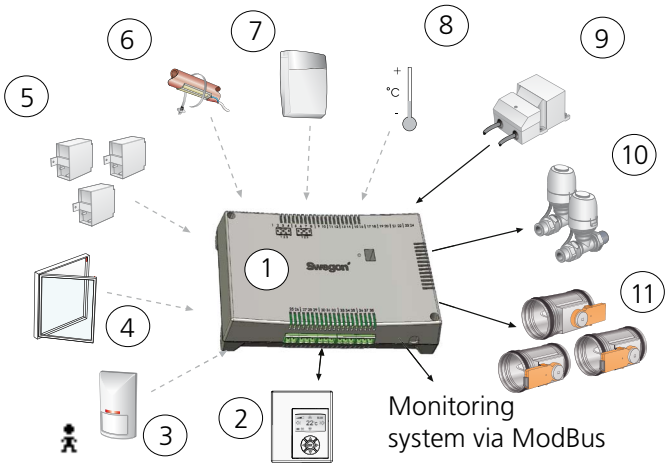

Figure 6. CONDUCTOR W4: Integral Components

1	*Controller*	*Conductor RE*
2	*Room unit*	*Conductor RU*
3	*Presence sensor*	*DETECT Occupancy*
4	*Window contact*	
5	*Pressure sensor*	*SYST PS*
6	*Condensation sensor*	*SYST CG*
7	*CO_2 sensor*	*DETECT Quality*
8	*External temp. sensor*	*CONDUCTOR T-TG*
9	*Transformer*	*SYST TS-1*
10	*Valve actuator*	*LUNA a AT-2*
11	*Ventilation damper incl. damper actuator*	*CRTc-(aaa)-2 (aaa = dimension)*
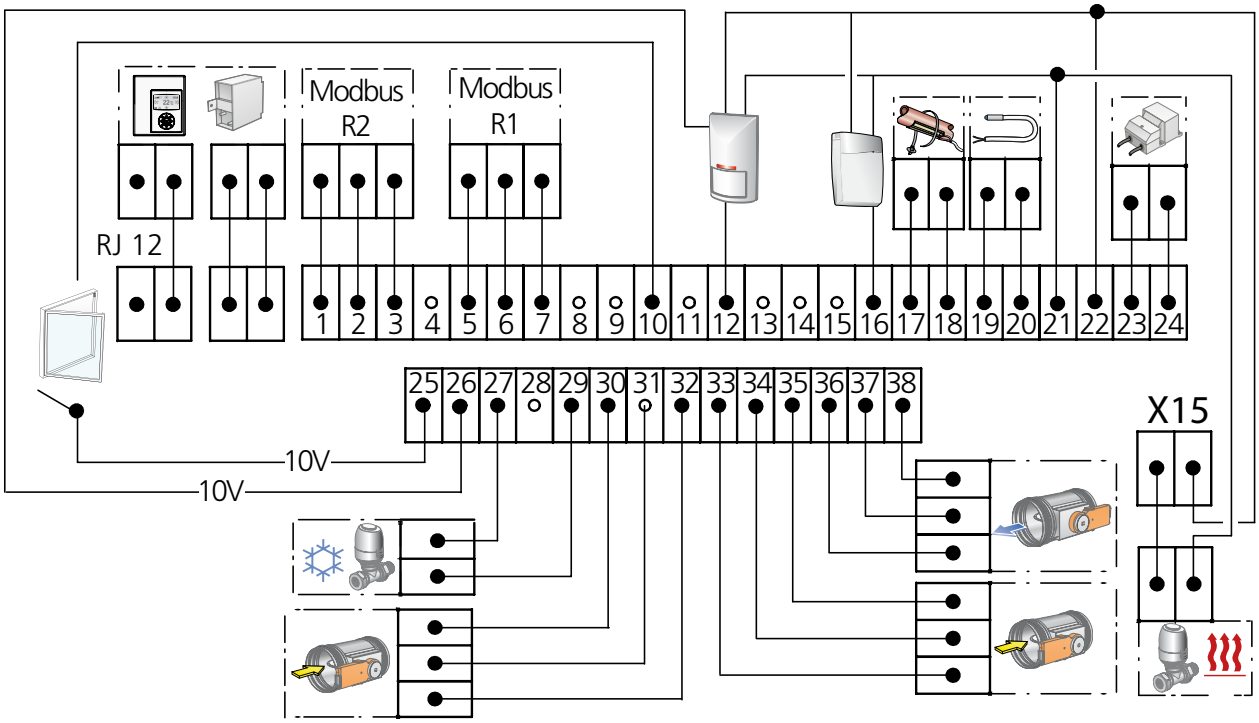
Room unit	RJ12	Modulare Contact
Pressure sensor	RJ12	Modulare Contact
MODBUS RS2	1	Data (B)
	2	Data (A)
	3	Earth
MODBUS RS1	5	Data (B)
	6	Data (A)
	7	Earth
Condensation sensor	17	Resistance
	18	
Temperature detector	19	KTY
	20	
Valve actuator, heating	21	+24V
	22 X15	-G0
Transformer	23	+ 24V AC
	24	-G0
Window contact	25	10V
	10	10V
Presence detector	26	10V
	12	0-10V
	21	+24V AC
	22	-G0
Valve actuator, cooling	27	-G0
	29	+24V
Damper 2, supply air	30	-G0
	31	0-10V
	32	+24 V
Damper 1, supply air	33	-G0
	34	0-10V
	35	+24V
Damper, extract air	36	-G0
	37	0-10V
	38	+24V
CO_2 sensor	16	0-10V Signal
	21	+24V AC
	22	-G0