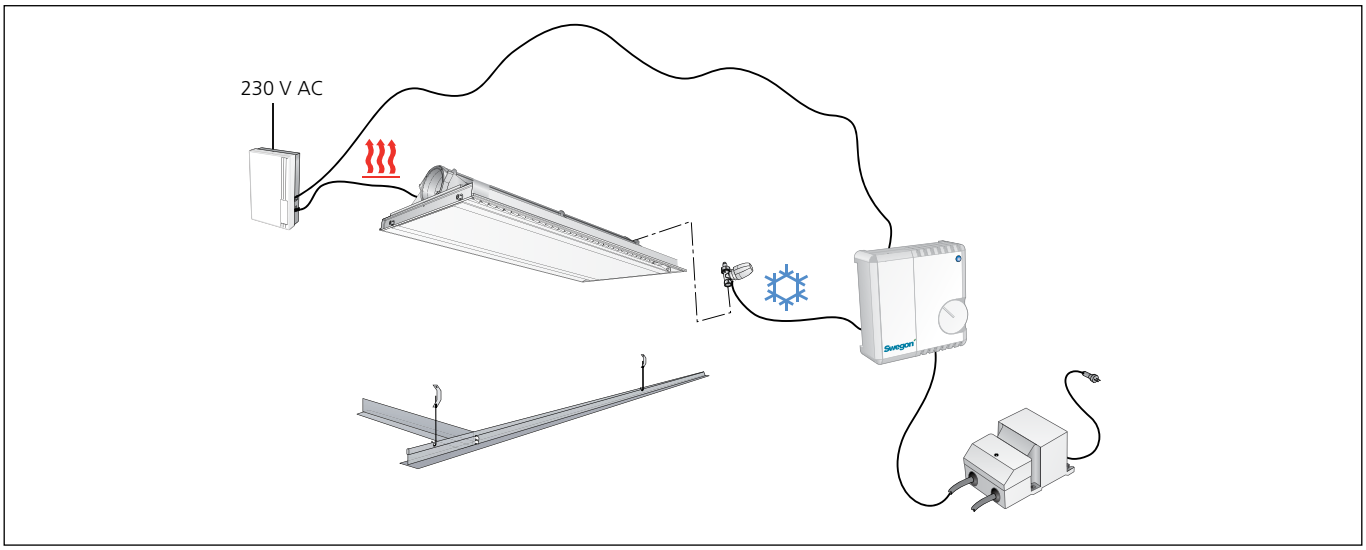

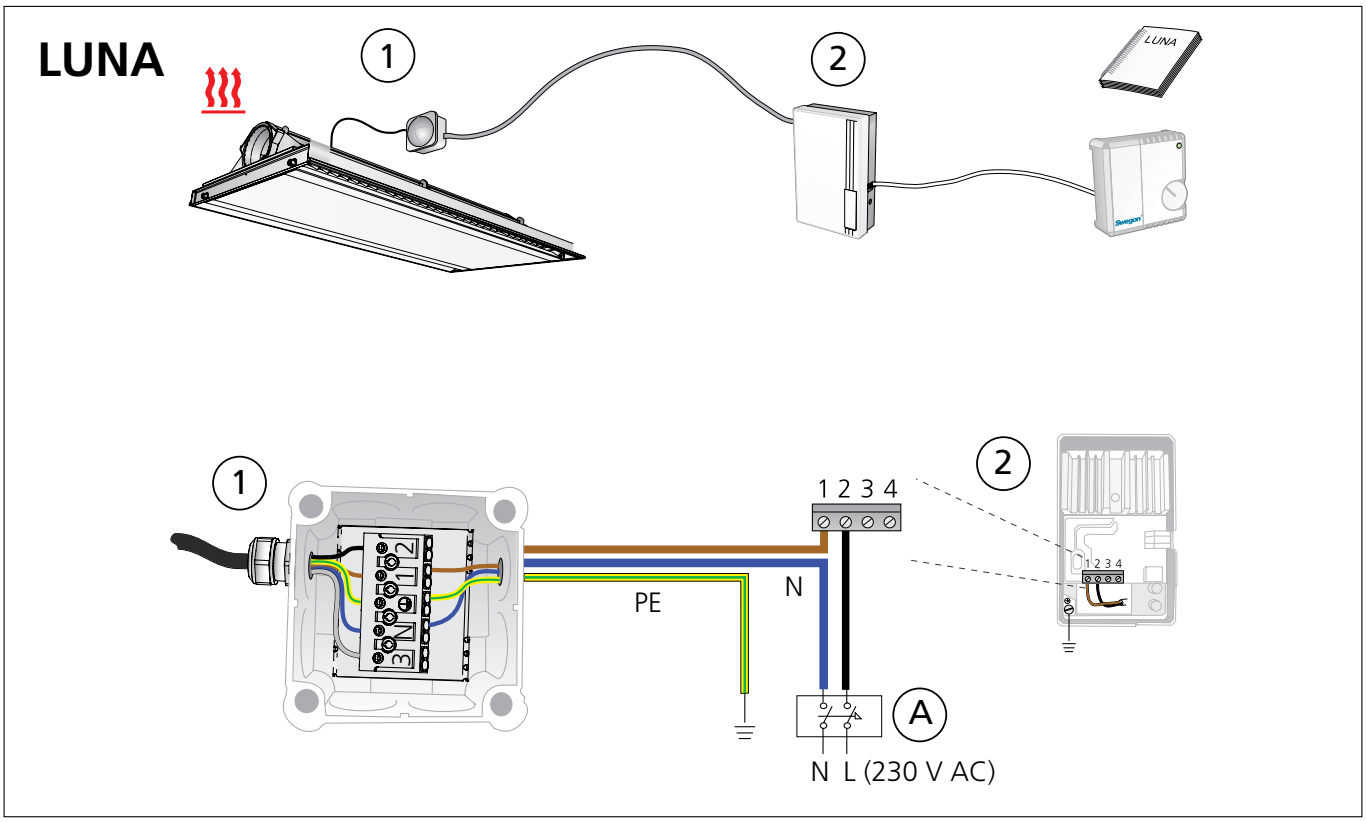

A: Allpolig brytare, brytavstånd >3mm; A: Double-pole switch, contact separation >3mm

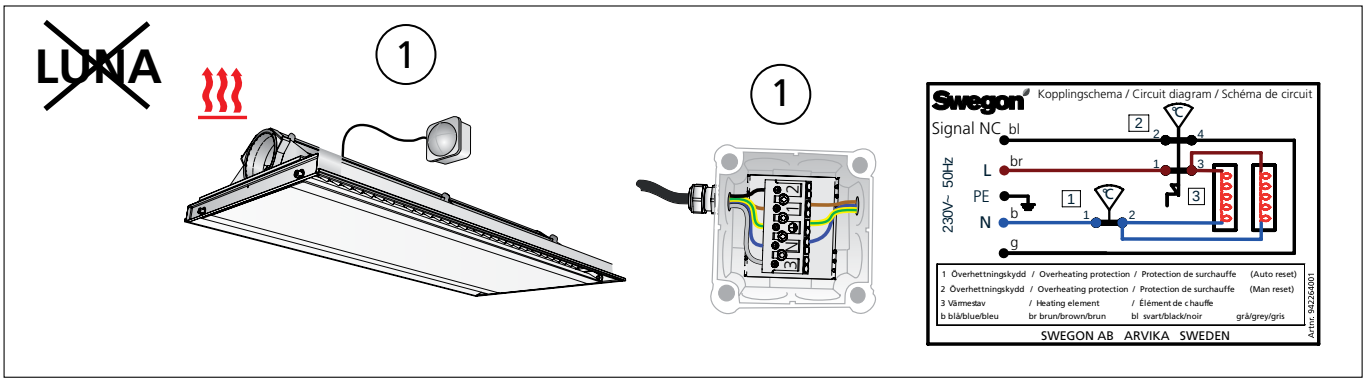

The appliance is not to be used by children or persons with reduced physical, sensory or mental capabillities, or lack of experience and knowledge, unless they have been given supervision or instruction.
Children being supervised not to play with the appliance.
Instructions for heaters for mounting at high level state that the heater must be installed at least 1,8m above the floor.Necessity to allow disconnection of the appliance from the supply after installation, by accessible plug or a switch in the fixed wiring.