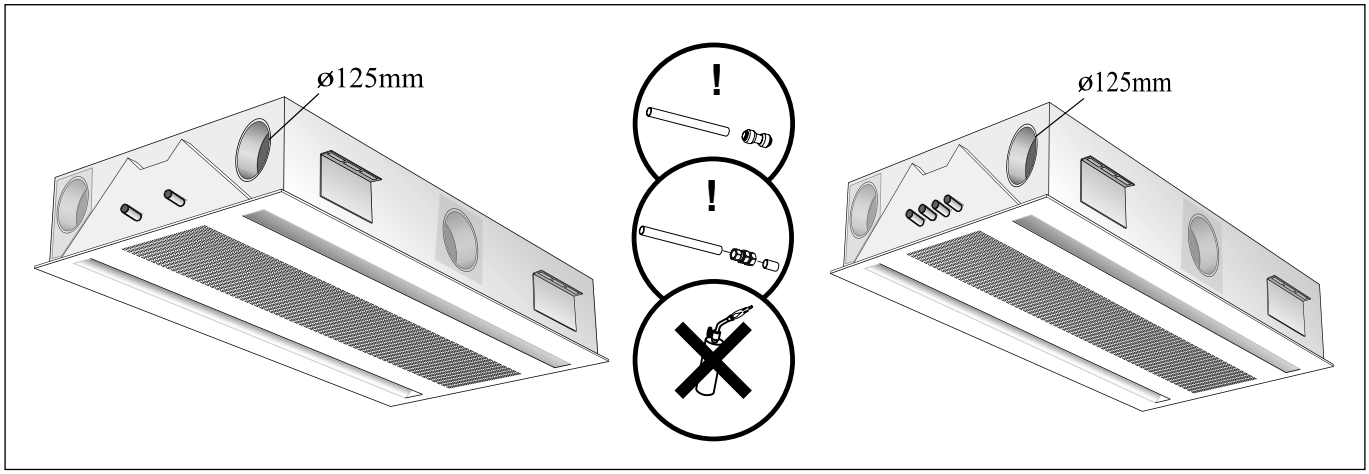
ø125mm
!
!
ø125mm

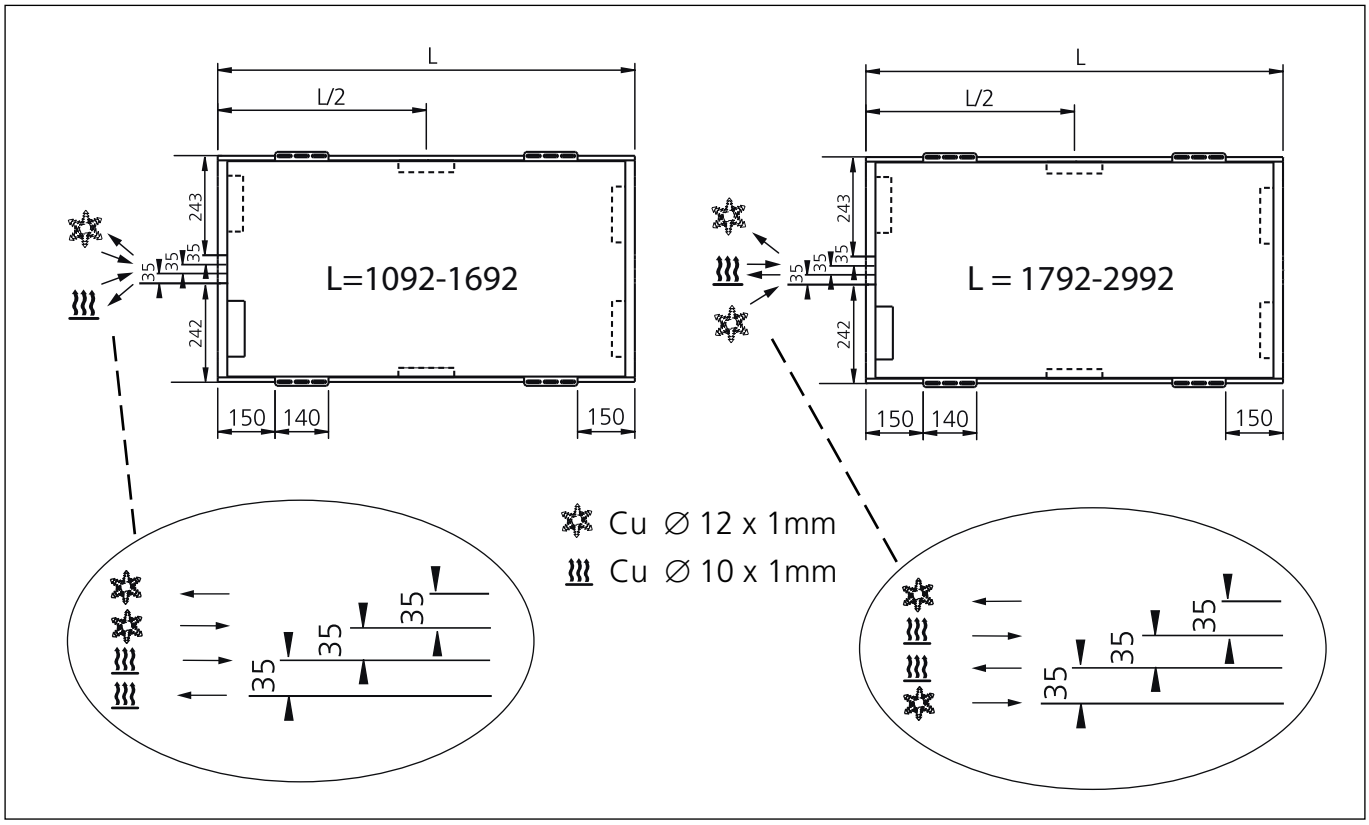
L
L/2
243
35
35
35
242
L=1092-1692
150
140
150
L
L/2
243
35
35
35
242
L = 1792-2992
150
140
150
Cu ∅ 12 x 1mm
Cu ∅ 10 x 1mm
35
35
35
35
35
35

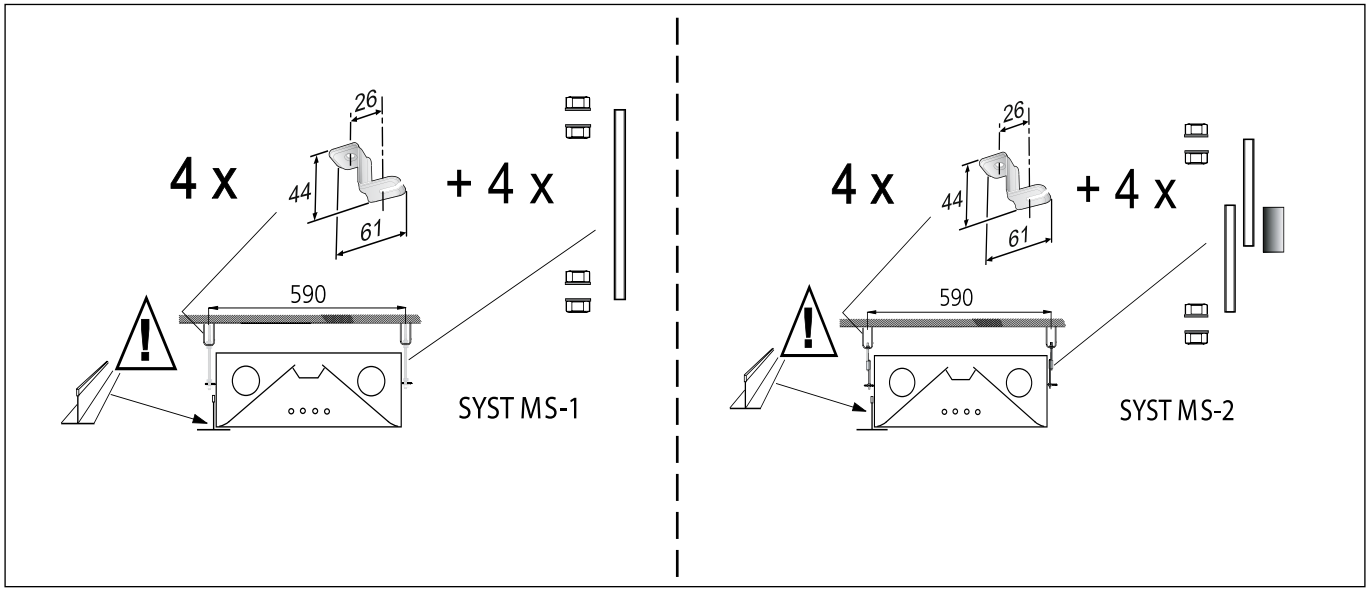
4 x
26
44
61
+ 4 x
590
SYST MS-1
4 x
26
44
61
+ 4 x
590
SYST MS-2

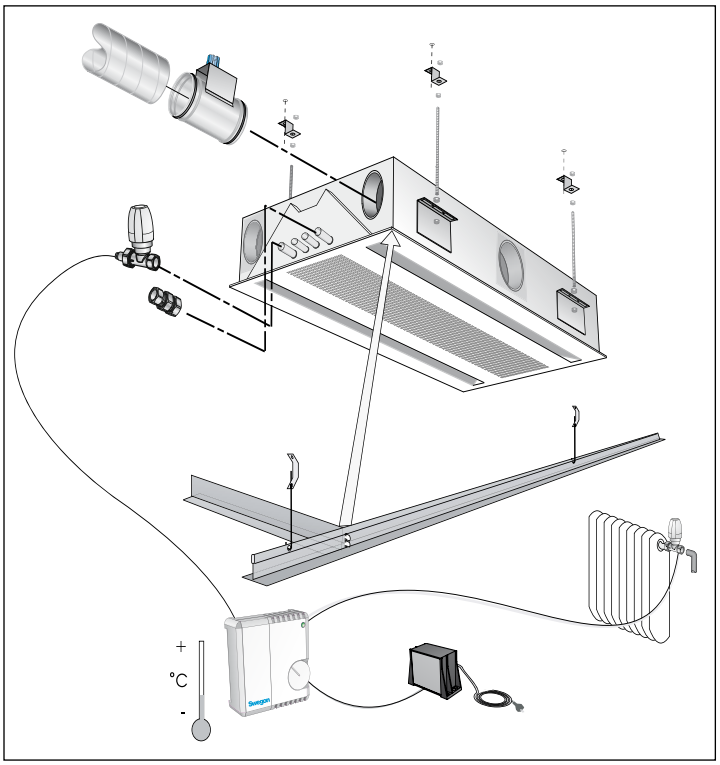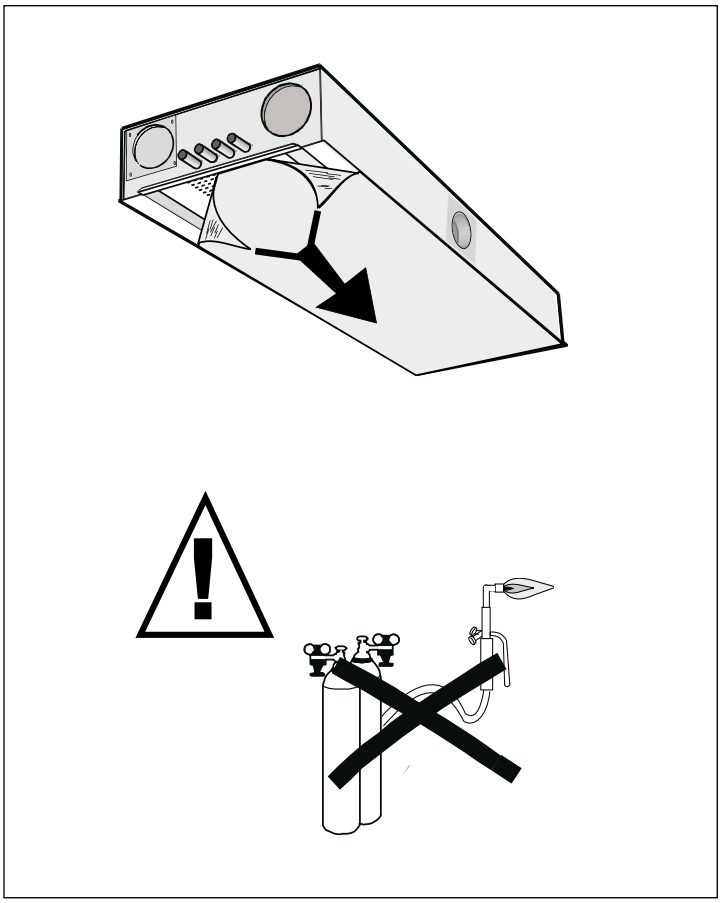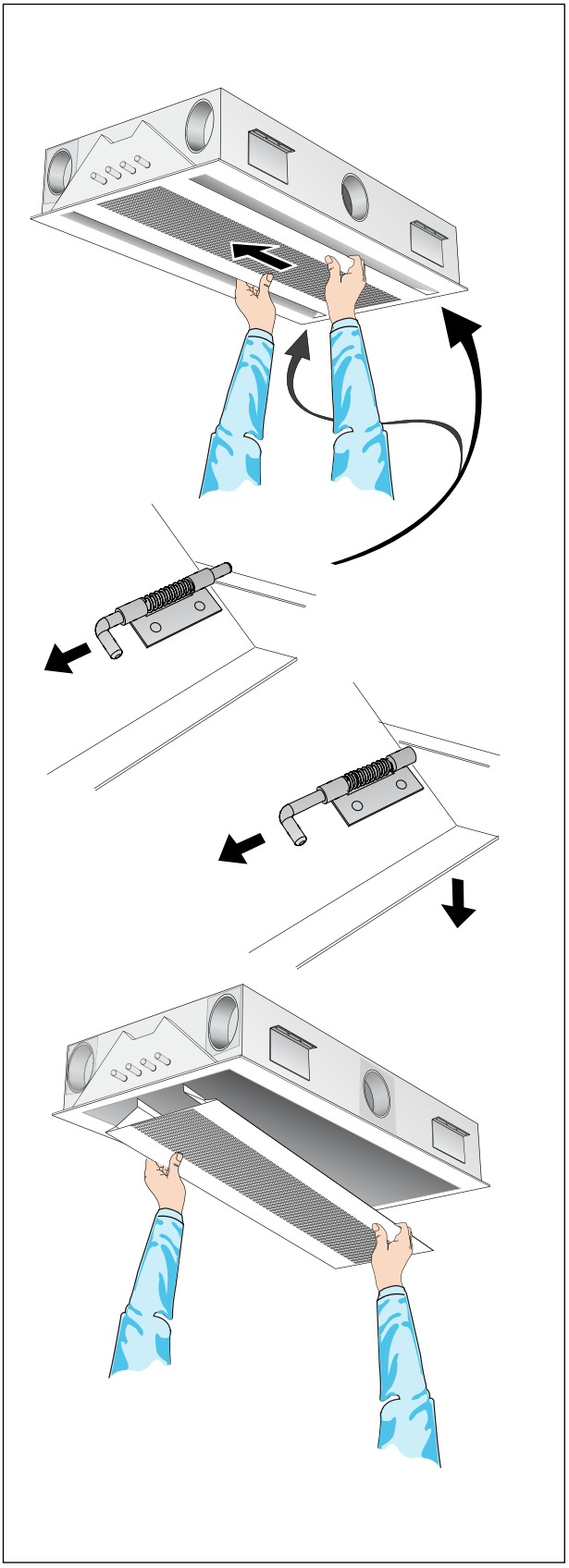
+
°C
-