# GOLD version E/F/G, Function Guide, SMART Link/AQUA Link

## 1. General

The *SMART Link* function is intended for use in controlling the times, temperatures, etc. as well as reading the alarms and settings of a Swegon chiller/heat pump via a hand-held micro terminal and web page in a GOLD air handling unit.

### 1.1 Energy-saving functions

#### 1.1.1 Control of the supply air temperature/supply flow temperature

By comparing the supply air temperature downstream of the fan with the supply flow temperature to the coil, the equipment makes sure that the valve for the coil opens only if the water has a temperature that conveys energy to the air.

This means that if there is a heat load and the water temperature is lower than the supply air temperature, which can occur during defrosting cycles, the valve is not allowed to open. If there is a cooling load, the reverse applies.

#### 1.1.2 Optimisation function

A cooling unit/heat pump will be more effective if the difference between the outdoor temperature and the water temperature is as small as possible. This reduces energy consumption.

The supply air energy to a water coil is controlled by a valve. Optimisation of the valve position so that it always strives to be fully open, and instead control the water temperature, saves energy.

#### 1.1.3 AQUA Link

The AQUA Link provides both air handling units and comfort modules with cooling power. Even here energy savings are obtainable by allowing the need to control the water temperature.

Depending on whatever the specific need is (dehumidification, cooling of the supply air, cooling of the room via comfort modules), the temperature of the chilled water can be varied and the control system ensures that the chiller will not produce chilled water that is colder than necessary.

### 1.1 Installation

The installation work is fast and simple compared with that of other systems. It requires only hydraulic and electric connection between the GOLD unit, chiller/heat pump and possible AQUA Link.

All the necessary control functions are ready to activate.

One supplier of all the equipment.

The IQlogic⁺ module TBIQ-3-1 is included in the AQUA Link equipment cubical.

## 2. Material Specification

| | |
|---|---|
| Air handling unit | **GOLD RX/PX/CX/SD** |
| Cable adapter | **TBLZ-1-64** |
| IQlogic⁺ module, extra regulation sequence (SMART link) | **TBIQ-3-2** |

Chiller/heat pump manufactured by Swegon that uses glycolic water as cooling or heating media (not evaporative media).

Other equipment to the extent required:
Set of valves, air heater, air cooler, dual-purpose coil, AQUA Link.

# *3. Operation*

See below and the following pages for diagrammatic descriptions of the function.

## 3.1 Control of cooling/heating to the GOLD via Swegon chiller/heat pump

### 3.1.1 Chiller

The cooling capacity of the supply air is controlled via an IQlogic+ module (extra regulation sequence function, see separate instructions for the TBIQ IQlogic+ module) preset for cooling (0-10 V). The function can be activated in the hand-held terminal of the GOLD air handling unit (see the Operation and Maintenance Instructions for the GOLD).

Communication with the chiller is activated under the Functions/Extra/SMART link in the GOLD unit's handheld terminal, see Section 5.

If temperature sensor BT1 calls for cooling, the function transmits a refrigerant setpoint (12°C*) to the chiller via Modbus.

If the temperature by temperature sensor BT50 is lower than the temperature by temperature sensor BT30**, the function allows valve MF2 to regulate the flow.

If the temperature by temperature sensor BT50 is higher than the temperature by temperature sensor BT30**, the function does not allow valve MF2 to regulate the flow (forces it to close).

*Optimisation function active:*
To ensure the best functionality when the optimisation function is activated, the value for cooling diff. (2 K*) should be set to the same value as that set in the chiller, see Section 5.

If the temperature by temperature sensor BT40 (reference water) is within 2K* from the refrigerant temperature setpoint and if it has been so during a continuous period of more than 60 seconds* the optimisation function is allowed.

If the optimisation function is allowed and valve MF2 is fully open (100%*) the controller decreases the refrigerant temperature setpoint at a rate of 0.3K/minute*.

If the optimisation function is allowed and valve MF2 is open less than 80%*, the controller increases the refrigerant temperature setpoint at a rate of 0.6K/minute*.

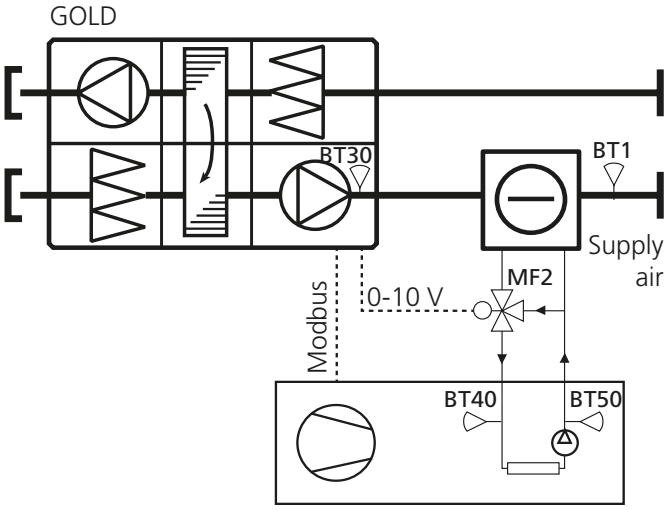


Swegon chiller

*A pump and accumulator tank can be added and, depending on the size of the system, can be located inside or outside the chiller.*

** Factory setting. The value can be changed.*
*** Estimated temperature in the GOLD RX.*


Swegon reserves the right to alter specifications.

### 3.1.2 Heat pump

The heating capacity of the supply air is controlled via an IQlogic+ module (extra regulation sequence function, see separate instructions for the TBIQ IQlogic+ module) preset for heating (0-10 V). The function can be activated in the hand-held terminal of the GOLD air handling unit (see the Operation and Maintenance Instructions for the GOLD).

Communication with the heat pump is activated under the Functions/Extra/SMART link in the GOLD unit's hand-held terminal, see Section 5.

If temperature sensor BT1 calls for heating, the function transmits a start signal and heating medium setpoint (40°C*) to the heat pump via Modbus.

If the temperature by temperature sensor BT50 is higher than the temperature by temperature sensor BT30**, the function allows valve MF1 to regulate the flow.

If the temperature by temperature sensor BT50 is lower than the temperature by temperature sensor BT30**, the function does not allow valve MF1 to regulate the flow (forces it to close).

*Optimisation function active:*

To ensure the best functionality when the optimisation function is activated, the heating diff. value (3 K*) should be set to the same value as that set in the heat pump. See Section 5.

If the temperature by temperature sensor BT40 (reference water) is within 3K* from the heating medium temperature setpoint and if it has been so during a continuous period of more than 60 seconds* the optimisation function is allowed.

If the optimisation function is allowed and valve MF1 is fully open (100%*) the controller increases the heating medium temperature setpoint at a rate of 0.3K/minute*.

If the optimisation function is allowed and valve MF1 is open less than 80%*, the controller decreases the refrigerant temperature setpoint at a rate of 0.6K/minute*.

** Factory setting. The value can be changed.*
*** Estimated temperature in the GOLD RX.*

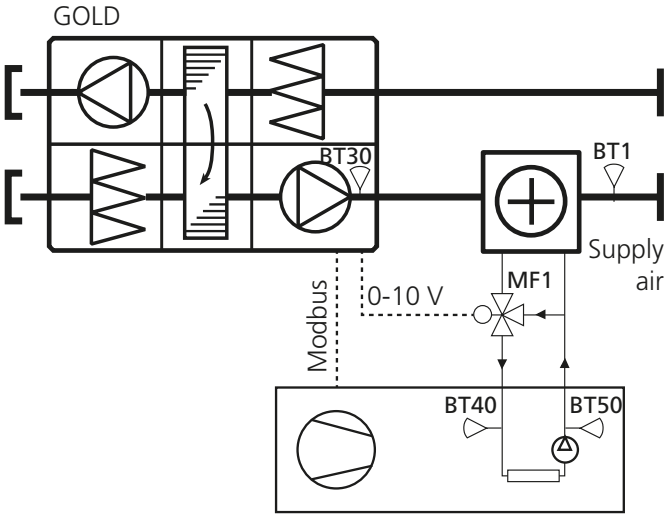


Swegon heat pump

*A pump and accumulator tank can be added and, depending on the size of the system, can be located inside or outside the heat pump.*

### 3.1.3 Reversible chiller/heat pump

The heating or cooling capacity of the supply air is controlled via an IQlogic+ module (extra regulation sequence function, see separate instructions for the TBIQ IQlogic+ module) preset for heating and cooling (0-10 V). The function can be activated in the hand-held terminal of the GOLD air handling unit (see the Operation and Maintenance Instructions for the GOLD).

Communication with the reversible chiller/heat pump is activated under the Functions/Extra/SMART link in the GOLD unit's handheld terminal, see Section 5.

***Cooling***

If temperature sensor BT1 calls for cooling, the function transmits a start signal for cooling and a refrigerant setpoint (12°C*) to the reversible chiller/heat pump via Modbus.

If the temperature by temperature sensor BT50 is lower than the temperature by temperature sensor BT30**, the function allows valve MF1 to regulate the flow.

If the temperature by temperature sensor BT50 is higher than the temperature by temperature sensor BT30**, the function does not allow valve MF1 to regulate the flow (forces it to close).

*Optimisation function active:*

To ensure the best functionality when the optimisation function is activated, the value for cooling diff. (2 K*) should be set to the same value as that set in the reversible chiller/heat pump. See Section 5.

If the temperature by temperature sensor BT40 (reference water) is within 2K* from the refrigerant temperature setpoint and if it has been so during a continuous period of more than 60 seconds* the optimisation function is allowed.

If the optimisation function is allowed and valve MF1 is fully open (100%*) the controller decreases the refrigerant temperature setpoint at a rate of 0.3K/minute*.

If the optimisation function is allowed and valve MF1 is open less than 80%*, the controller increases the refrigerant temperature setpoint at a rate of 0.6K/minute*.

***Heating***

If temperature sensor BT1 calls for cooling, the function transmits a start signal for heating and a heating medium setpoint (40°C*) to the reversible chiller/heat pump via Modbus.

If the temperature by temperature sensor BT50 is higher than the temperature by temperature sensor BT30**, the function allows valve MF1 to regulate the flow.

If the temperature by temperature sensor BT50 is lower than the temperature by temperature sensor BT30**, the function does not allow valve MF1 to regulate the flow (forces it to close).

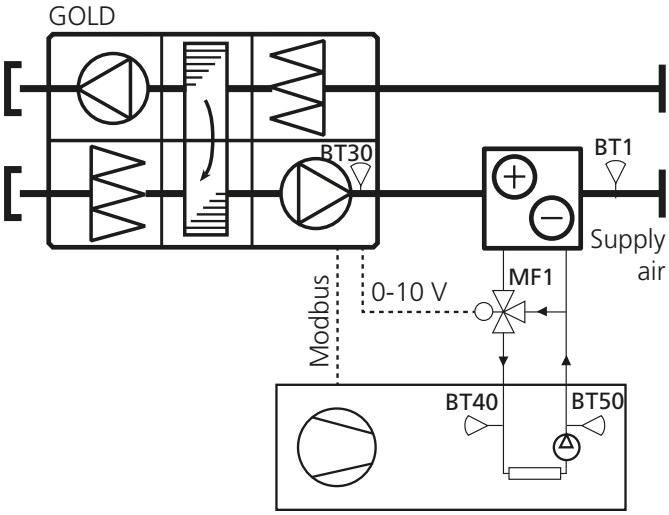


Swegon chiller/heat pump

*A pump and accumulator tank can be added and, depending on the size of the system, can be located inside or outside the chiller/heat pump. For more information, see the Swegon product brochure.*

*Optimisation function active:*

To ensure the best functionality when the optimisation function is activated, the heating diff. value (3 K*) should be set to the same value as that set in the reversible chiller/heat pump. See Section 5.

If the temperature by temperature sensor BT40 (reference water) is within 3K* from the heating medium temperature setpoint and if it has been so during a continuous period of more than 60 seconds* the optimisation function is allowed.

If the optimisation function is allowed and valve MF1 is fully open (100%*) the controller increases the heating medium temperature setpoint at a rate of 0.3K/minute*.

If the optimisation function is allowed and valve MF1 is open less than 80%*, the controller decreases the heating medium temperature setpoint at a rate of 0.6K/minute*.

** Factory setting. The value can be changed.*
*** Estimated temperature in the GOLD RX.*


Swegon reserves the right to alter specifications.

### 3.1.4 Chiller and external heating

The cooling capacity of the supply air is controlled via an IQlogic+ module (extra regulation sequence function, see separate instructions for the TBIQ IQlogic+ module) preset for cooling (0-10 V). The function can be activated in the hand-held terminal of the GOLD air handling unit (see the Operation and Maintenance Instructions for the GOLD).

The function controls external heating (waterborne or electric) via the GOLD unit's ordinary output for heating (0-10 V). The air heater for heated water has a frost monitor function and is automatically activated when it is connected.

Communication with the chiller is activated under the Functions/Extra/SMART link in the GOLD unit's handheld terminal, see Section 5.

If temperature sensor BT1 calls for cooling, the function transmits a refrigerant setpoint (12°C*) to the chiller via Modbus.

If the temperature by temperature sensor BT50 is lower than the temperature by temperature sensor BT30**, the function allows valve MF2 to regulate the flow.

If the temperature by temperature sensor BT50 is higher than the temperature by temperature sensor BT30**, the function does not allow valve MF2 to regulate the flow (forces it to close).

If dehumification is active, the function allows valve MF1 to regulate the flow.

*Optimisation function active:*

To ensure the best functionality when the optimisation function is activated, the value for cooling diff. (2 K*) should be set to the same value as that set in the chiller, see Section 5.

If the temperature by temperature sensor BT40 (reference water) is within 2K* from the refrigerant temperature setpoint and if it has been so during a continuous period of more than 60 seconds* the optimisation function is allowed.

If the optimisation function is allowed and valve MF2 is fully open (100%*) the controller decreases the refrigerant temperature setpoint at a rate of 0.3K/minute*.

If the optimisation function is allowed and valve MF2 is open less than 80%*, the controller increases the refrigerant temperature setpoint at a rate of 0.6K/minute*.

** Factory setting. The value can be changed.*
*** Estimated temperature in the GOLD RX.*

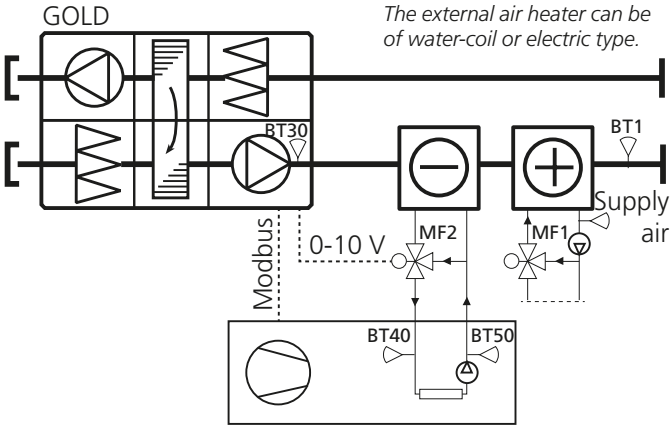


*The external air heater can be of water-coil or electric type.*

Swegon chiller

*A pump and accumulator tank can be added and, depending on the size of the system, can be located inside or outside the chiller.*

### 3.1.5 Heat pump and external heating

The heating capacity of the supply air is controlled via an IQlogic+ module (extra regulation sequence function, see separate instructions for the TBIQ IQlogic+ module) preset for heating (0-10 V). The function can be activated in the hand-held terminal of the GOLD air handling unit (see the Operation and Maintenance Instructions for the GOLD).

The function controls external heating (waterborne or electric) via the GOLD unit's ordinary output for heating (0-10 V). The air heater for heated water has a frost monitor function and is automatically activated when it is connected.

Communication with the heat pump is activated under the Functions/Extra/SMART link in the GOLD unit's hand-held terminal, see Section 5.

If temperature sensor BT1 calls for heating, the function transmits a start signal and heating medium setpoint (40°C*) to the heat pump via Modbus.

If the temperature by temperature sensor BT50 is higher than the temperature by temperature sensor BT30**, the function allows valve MF1 to regulate the flow.

If the temperature by temperature sensor BT50 is lower than the temperature by temperature sensor BT30**, the function does not allow valve MF1 to regulate the flow (forces it to close).

*Optimisation function active:*
To ensure the best functionality when the optimisation function is activated, the heating diff. value (3 K*) should be set to the same value as that set in the heat pump. See Section 5.

If the temperature by temperature sensor BT40 (reference water) is within 3K* from the heating medium temperature setpoint and if it has been so during a continuous period of more than 60 seconds* the optimisation function is allowed.

If the optimisation function is allowed and valve MF1 is fully open (100%*) the controller increases the heating medium temperature setpoint at a rate of 0.3K/minute*.

If the optimisation function is allowed and valve MF1 is open less than 80%*, the controller decreases the heating medium temperature setpoint at a rate of 0.6K/minute*.

** Factory setting. The value can be changed.*
*** Estimated temperature in the GOLD RX.*

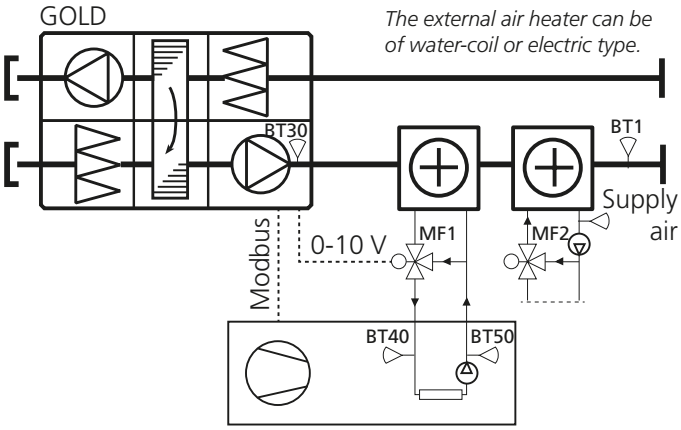


Swegon heat pump
*A pump and accumulator tank can be added and, depending on the size of the system, can be located inside or outside the heat pump.*


Swegon reserves the right to alter specifications.

### 3.1.6 Reversible chiller/ heat pump and external heating

The heating or cooling capacity of the supply air is controlled via an IQlogic+ module (extra regulation sequence function, see separate instructions for the TBIQ IQlogic+ module) preset for heating and cooling (0-10 V). The function can be activated in the hand-held terminal of the GOLD air handling unit (see the Operation and Maintenance Instructions for the GOLD).

The function controls external heating (waterborne or electric) via the GOLD unit's ordinary output for heating (0-10 V). The air heater for heated water has a frost monitor function and is automatically activated when it is connected.

Communication with the reversible chiller/heat pump is activated under the Functions/Extra/SMART link in the GOLD unit's handheld terminal, see Section 5.

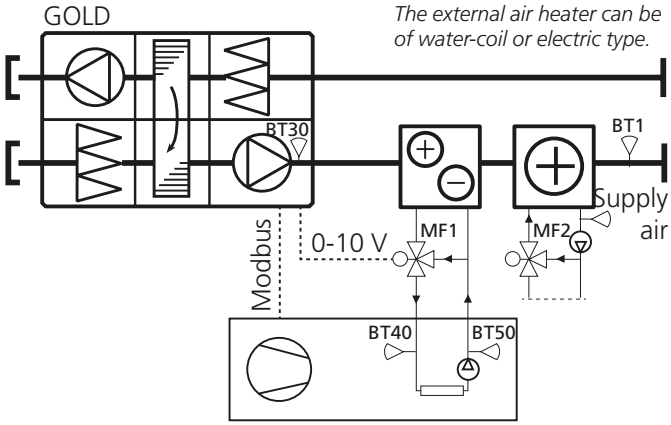


*The external air heater can be of water-coil or electric type.*

Swegon chiller/heat pump

*A pump and accumulator tank can be added and, depending on the size of the system, can be located inside or outside the chiller/heat pump.*

***Cooling***

If temperature sensor BT1 calls for cooling, the function transmits a start signal for cooling and a refrigerant setpoint (12°C*) to the reversible chiller/heat pump via Modbus.

If the temperature by temperature sensor BT50 is lower than the temperature by temperature sensor BT30**, the function allows valve MF1 to regulate the flow.

If the temperature by temperature sensor BT50 is higher than the temperature by temperature sensor BT30**, the function does not allow valve MF1 to regulate the flow (forces it to close).

*Optimisation function active:*

To ensure the best functionality when the optimisation function is activated, the value for cooling diff. (2 K*) should be set to the same value as that set in the reversible chiller/heat pump. See Section 5.

If the temperature by temperature sensor BT40 (reference water) is within 2K* from the refrigerant temperature setpoint and if it has been so during a continuous period of more than 60 seconds* the optimisation function is allowed.

If the optimisation function is allowed and valve MF1 is fully open (100%*) the controller decreases the refrigerant temperature setpoint at a rate of 0.3K/minute*.

If the optimisation function is allowed and valve MF1 is open less than 80%*, the controller increases the refrigerant temperature setpoint at a rate of 0.6K/minute*.

***Heating***

If temperature sensor BT1 calls for heating, the function transmits a start signal for heating and a heating medium setpoint (40°C*) to the reversible chiller/heat pump via Modbus.

If the temperature by temperature sensor BT50 is higher than the temperature by temperature sensor BT30**, the function allows valve MF1 to regulate the flow.

If the temperature by temperature sensor BT50 is lower than the temperature by temperature sensor BT30**, the function does not allow valve MF1 to regulate the flow (forces it to close).

*Optimisation function active:*

Optimisation is not carried out if temperature regulation is selected for extract air regulation.

To ensure the best functionality when the optimisation function is activated, the heating diff. value (3 K*) should be set to the same value as that set in the reversible chiller/heat pump. See Section 5.

If the temperature by temperature sensor BT40 (reference water) is within 3K* from the heating medium temperature setpoint and if it has been so during a continuous period of more than 60 seconds* the optimisation function is allowed.

If the optimisation function is allowed and valve MF1 is fully open (100%*) the controller increases the heating medium temperature setpoint at a rate of 0.3K/minute*.

If the optimisation function is allowed and valve MF1 is open less than 80%*, the controller decreases the heating medium temperature setpoint at a rate of 0.6K/minute*.

** Factory setting. The value can be changed.*
*** Estimated temperature in the GOLD RX.*

## 3.2 Control of cooling energy to the GOLD and comfort modules via the Swegon chiller and AQUA Link

### 3.2.1 Control of cooling energy to the GOLD

The cooling capacity of the supply air is controlled via valve actuator MF2 and an IQlogic+ module (extra regulation sequence function, see separate instructions for the TBIQ IQlogic+ module) preset for cooling (0-10 V). Cooling can be activated in the hand-held terminal of the GOLD air handling unit (see the Operation and Maintenance Instructions for the GOLD).

### 3.2.2 Control of cooling energy to the comfort modules

See the function guide for All Year Comfort (AYC).

### 3.2.3 Swegon chiller and AQUA Link

Communication with the chiller is activated under the Functions/Extra/SMART link in the GOLD unit's handheld terminal, see Section 5.

Communication with AQUA Link takes place via the IQlogic+ module (function selector switch set to 5) which controls and manages alarms from pump G20. The module is located in the AQUA Links cubicle.

The chiller's water temperature setpoint is controlled by the GOLD unit and is determined by the cooling load in the ventilation system. The temperature setpoint from the AYC function is compared with the ordinary cooling supply air setpoint and the lowest value of these is transmitted as a setpoint to the chiller.

Circulation pump G20 located inside the AQUA Link is started and stopped via the GOLD unit. When the GOLD unit is in operation and valve MF2 or MF10 is open more than 5%, circulation pump G20 starts up.

*Optimisation function active:*
Applies to the supply air cooling setpoint.

To ensure the best functionality when the optimisation function is activated, the value for cooling diff. (2 K*) should be set to the same value as that set in the chiller, see Section 5.

If the temperature by temperature sensor BT40 (reference water) is within 2K* from the refrigerant temperature setpoint and if it has been so during a continuous period of more than 60 seconds* the optimisation function is allowed.

If the optimisation function is allowed and valve MF2 is fully open (100%*) the controller decreases the refrigerant temperature setpoint at a rate of 0.3K/minute*.

If the optimisation function is allowed and valve MF2 is open less than 80%*, the controller increases the refrigerant temperature setpoint at a rate of 0.6K/minute*.

** Factory setting. The value can be changed.*

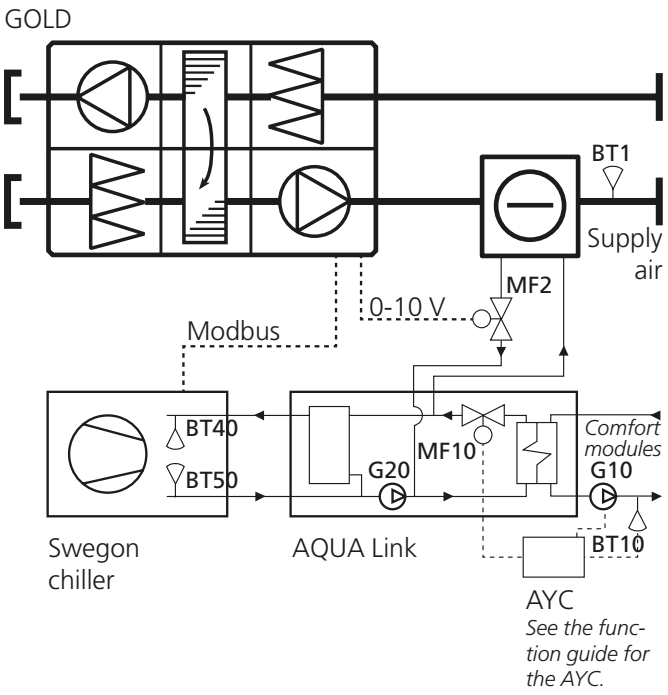



Swegon reserves the right to alter specifications.

# *4. Electrical connections.*

## 4.1 SMART Link

Connect the bus cable (supplied) between the bus contact, marked COM4, on the control unit of the GOLD unit and an optional bus contact on the cable adapter.

The communication cable between the chiller/heat pump control equipment and TBLZ-64 cable adapter should be wired according to one of the alternatives below.

The cables are not included in the supply. Twisted-pair cables are recommended.

### 4.1.1 Alternative 1. Connection to the chiller's/heat pump's controller

*Cable adapter (TBLZ-64)*

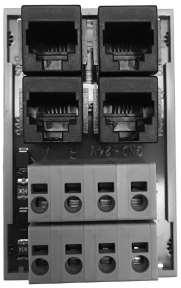

*pC05+*




*Wiring terminals for the TBLZ-64 cable adapter*

*Wiring terminals, pC05+ chiller/heat pump*

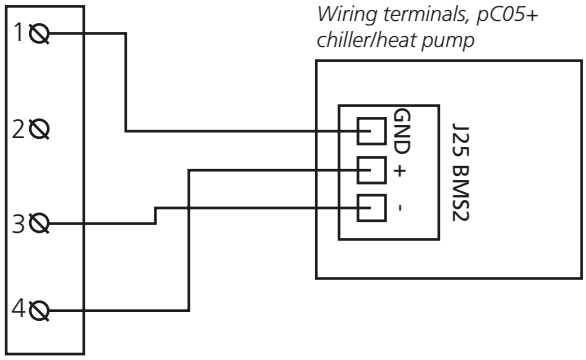

### 4.1.2 Alternative 2. Connection via external SMART Link communications interface

*Cable adapter (TBLZ-64)*

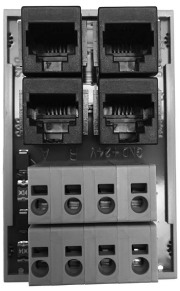

*Communications interface (SMART Link)*

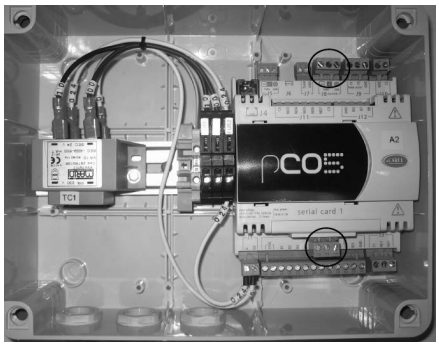

*A4 (RS485)*




*A2 (μC²)*




*Wiring terminals for the TBLZ-64 cable adapter*

*Wiring terminals, SMART Link communications interface*

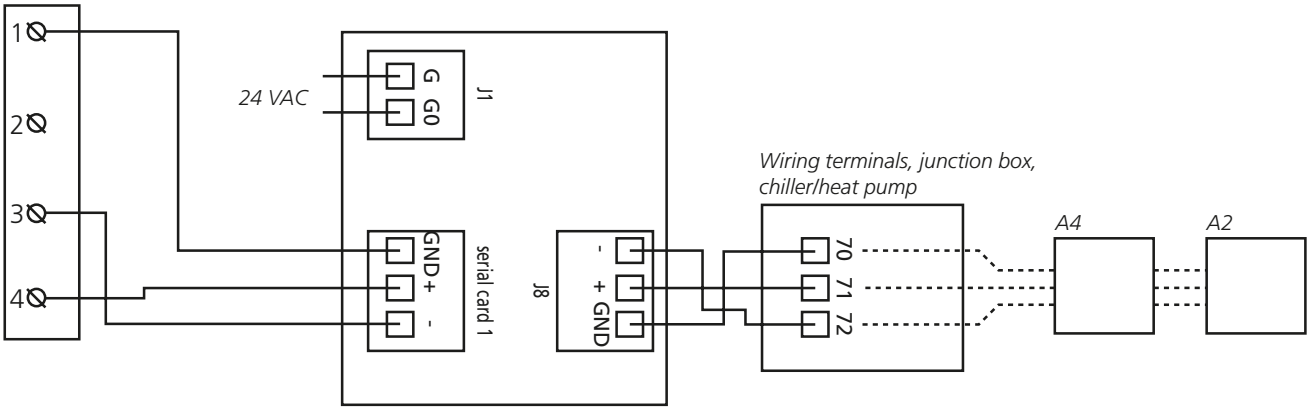


Cable connected at the factory



Swegon reserves the right to alter specifications.

### 4.1.3 Alternative 3. Connection via built-in SMART Link communications interface

*Cable adapter (TBLZ-64)*

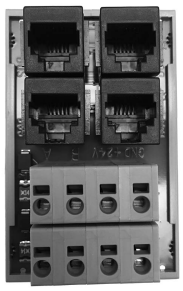

*Communications interface (SMART Link)*




*A4 (RS485)*




*A2 (μC²)*




*Wiring terminals for the TBLZ-64 cable adapter*

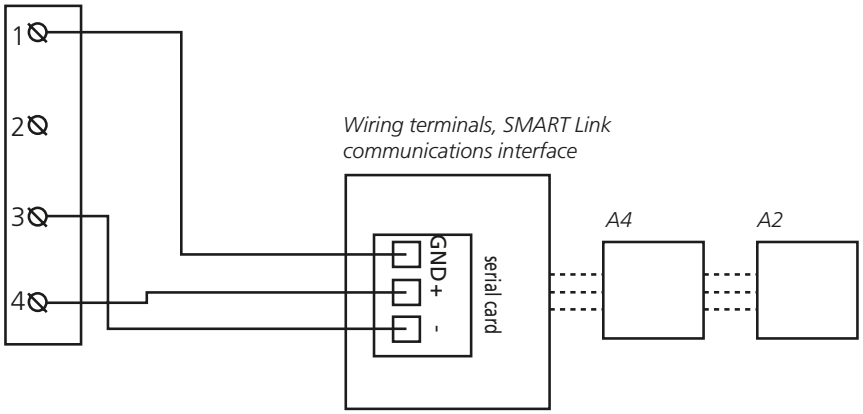


Cable connected at the factory

### 4.1.4 Alternative 4. Connection via internal iPro-link communications interface

*Cable adapter (TBLZ-64)*

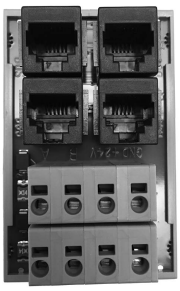

*ASM1 (iPro-link)*



*SERI1 (485/TTL)*



*A2 (IC208CX)*




*Wiring terminals for the cable adapter*

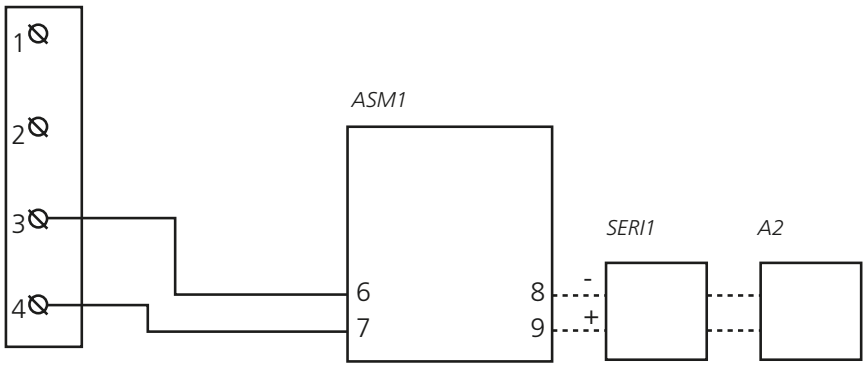


------ *Cable connected at the factory*



Swegon reserves the right to alter specifications.

### 4.1.5 Alternative 5. Connection via external A2 communications interface (RS485 slave)

*Cable adapter (TBLZ-64)*

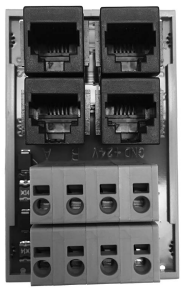

*A2 (RS485 slave)*

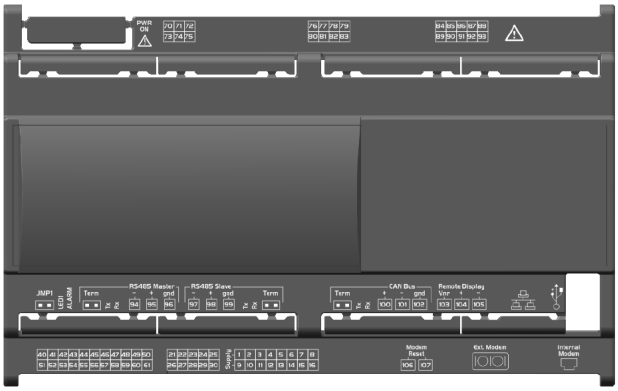

*Wiring terminals for the TBLZ-64 cable adapter*

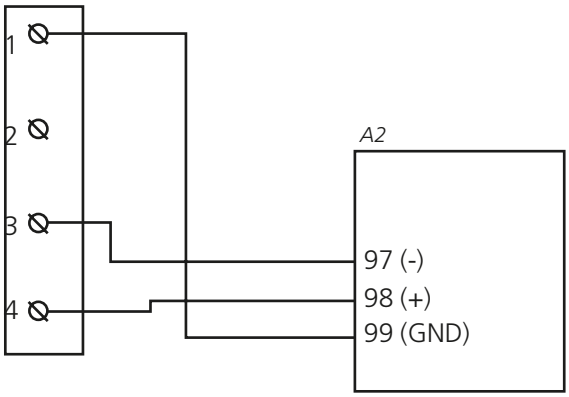

## 4.2 AQUA Link

If an AQUA Link is included in the system, the modular cable between the IQlogic⁺ module integrated into the AQUA Link electric cubicle, and the modular connection marked "COM3" on the GOLD AHU control unit should be connected. See illustration.

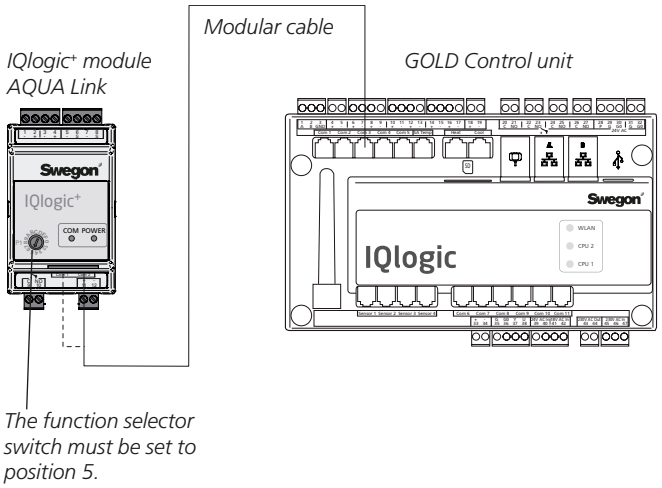


### 4.2.1 All Year Comfort

If All Year Comfort is included in the system (together with AQUA Link), a modular cable must be connected between the IQlogic⁺ module in the AQUA Link electrical distribution box and the IQlogic⁺ module in the All Year Comfort electrical equipment cubicle.

Other connections between AQUA Link and All Year Comfort is carried out on terminal blocks.

See sketch.

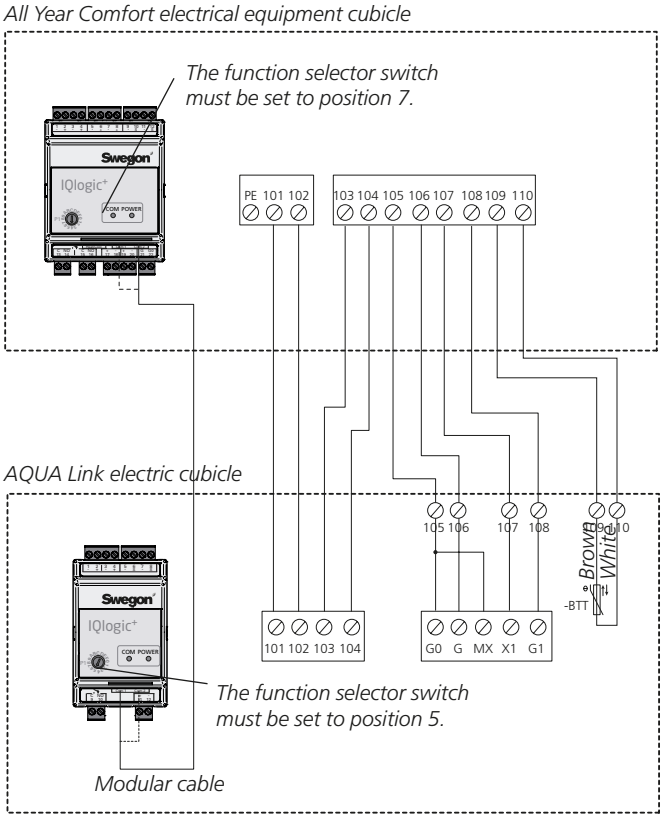




Swegon reserves the right to alter specifications.

## 5. Settings

For basic facts on how to use the hand-held terminal, see the Operation and Maintenance Instructions for the GOLD air handling unit.

The functions for the chiller/heat pump must be activated manually under the Functions/Extra/SMART Link.

The function can be activated, under Function.

Set the type supplied (water, heat pump/water, chiller/water, reversible/DX, heat pump/DX, chiller/DX, reversible.

Set the required set point for cooling and/or heating water as well as the permissible deviation under Settings. The set points represent the reference temperature of the refrigerant and heating medium returning to the chiller/heat pump. Set the limit for the outdoor temperature (minimum permitted operating temperature).

The function for the optimization of the set point heating and cooling can be activated under Optimize.

*Other chiller/heat pump settings can be entered in the chiller/heat pump.*

If required, AQUA Link can be activated under AQUA Link.

Select alarm on open contact, alarm on closed contact or contactor function for the pump alarm.

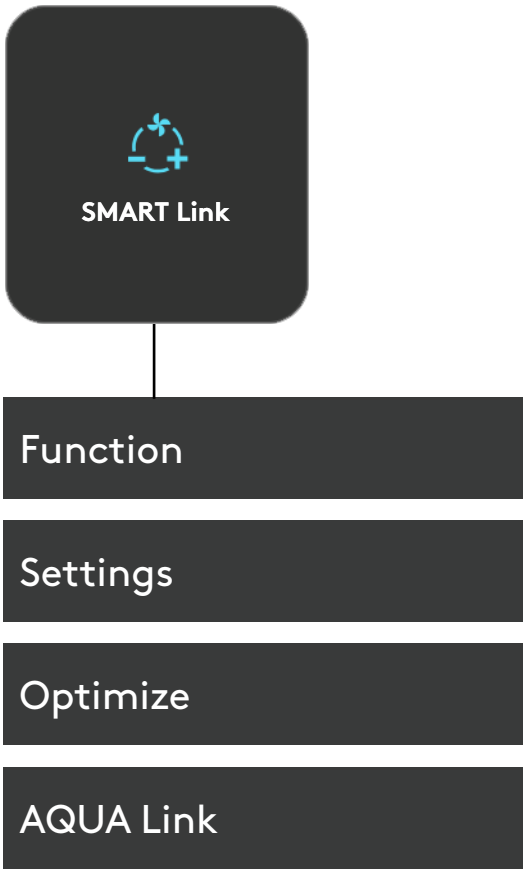


## 6. Status

The chiller/heat pump readings can be viewed under Status.

No values can be changed in this menu group.




## 7. Manual test

The actual input and output values on the circulation pump in the cooling circuit can be manually controlled under INSTALLATION – MANUAL TEST - SMART Link.

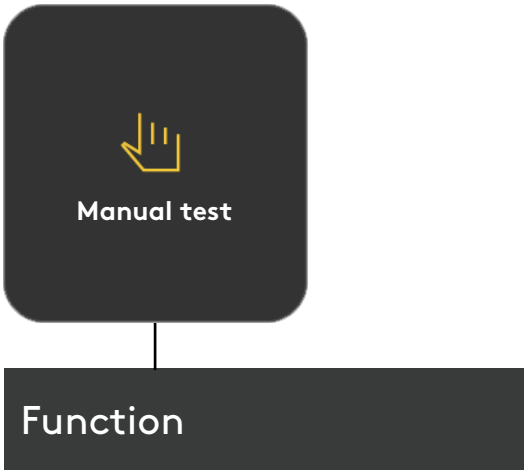

Swegon reserves the right to alter specifications.