actionair by Swegon

Joseph Wilson Industrial Estate, Whitstable, CT5 3DU UK
+44 (0) 1634 981400
actionair@swegon.com
www.swegon.com/uk/

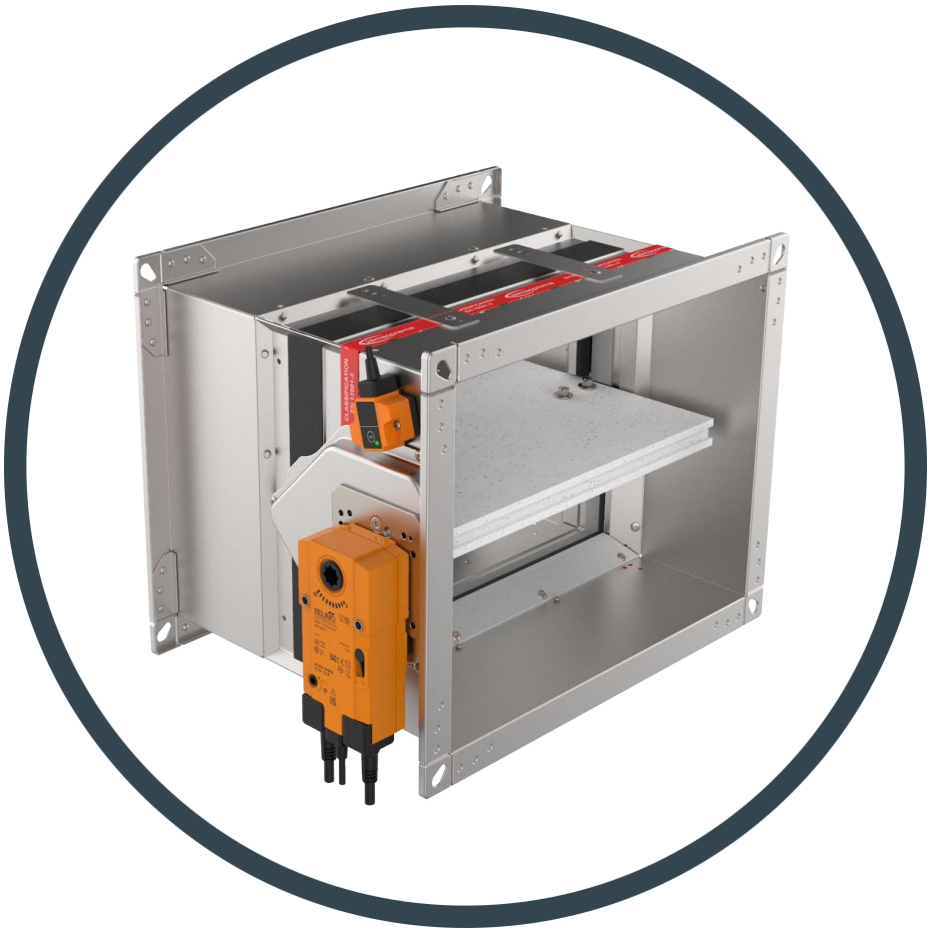

ThermShield FD EIS Classified Fire Damper

Fire protection

Installation and operation manual

Version 1.3

Issue Date: 10.07.2026.

Read this before using this manual

This installation and operating manual is designed to assist operational or service personnel in properly installing and utilizing the Actionair products, ensuring safe and effective use. This manual is intended for installation companies, in-house technicians, technical personnel, trained individuals, and certified electricians. It is crucial for these individuals to read and fully comprehend this manual be-fore commencing any work. Adhering to the safety guide-lines and all instructions within this manual is fundamental for safe operations. Local health and safety regulations, along with general safety standards, are also applicable.

Upon commissioning of the system, this manual should be provided to the system owner, who must retain it with the system documentation. The manual should be stored in an easily accessible location at all times.

The illustrations in this manual are primarily for informational purposes and may not accurately represent the actual design.

Limitation of Liability

The information provided in this manual has been compiled in accordance with relevant standards and guidelines, reflecting the current state of technology and our extensive expertise and experience.
The manufacturer disclaims any liability for damages arising from:

- Non-compliance with this manual
- Operation or handling by untrained personnel
- Technical alterations
- Improper use
- Unauthorized modifications
- Use of non-approved replacement components

The delivery contents may differ from what is described in this manual due to customized designs, extra order options, or recent technical modifications.
The responsibilities outlined in the order, along with the general terms and conditions, the manufacturer's delivery terms, and the applicable legal regulations at the time the contract is signed, will be in effect.
We reserve the right to implement technical modifications.

Copyright

This document is protected by copyright. Any unauthorized use may constitute a copyright infringement, and the infringer will be liable for any resulting damages.

Qualified Personnel

Warning!

Risk of Injury from Insufficiently Qualified Individuals!
Improper use may lead to significant injury or property damage. Only trained specialists should perform this work.
Personnel Requirements:
Skilled Qualified Electrician:
A skilled qualified electrician is an individual with adequate professional or technical training, knowledge, and hands-on experience necessary to work on electrical systems. They should be able to identify potential hazards associated with their tasks and recognize and mitigate any associated risks.

Specialist Personnel:
Specialist personnel possess sufficient professional or technical training, knowledge, and experience to fulfill their assigned responsibilities. They should be aware of potential hazards related to their work and capable of recognizing and avoiding any risks involved.

SAFETY!

Proper Use
The fire damper functions as an automatic shut-off device to prevent the spread of fire and smoke through ductwork. It is suitable for both supply and exhaust air in HVAC systems. The fire damper can be utilized in potentially explosive environments if the appropriate special accessories are employed and the product displays the CE conformity marking in accordance with Directive 94/9/EC. Fire dampers intended for such atmospheres are labeled for the zones for which they have been certified. The operation of the fire dampers is permitted only in accordance with installation regulations and the technical specifications provided in this installation and operating manual. Altering the fire damper or using unapproved replacement parts is strictly prohibited.

CAUTION!

Risk of Injury from Sharp Edges, Corners, and Thin Sheet Metal Parts! Sharp edges, pointed corners, and thin metal components can lead to cuts or abrasions. Exercise caution when performing any work. Always wear protective gloves, safety footwear, and a hard hat.

DANGER!

Risk of Electric Shock! Do Not Touch Live Components!
Electrical equipment carries hazardous voltage.
Only qualified electricians are permitted to work on the electrical system. Always turn off the power supply before servicing any electrical equipment.

WARNING!

Risk of Danger from Improper Use!
Incorrect use of the fire damper can create hazardous situations.
Never use the fire damper:

- Without specially approved attachments in potentially explosive environments
- As a smoke control damper
- Outdoors without adequate protection from weather conditions
- In environments where chemical reactions, whether intended or unintended, could damage the fire damper or cause corrosion.

* The images shown are for illustration purposes only and may not be an exact representation of the product.

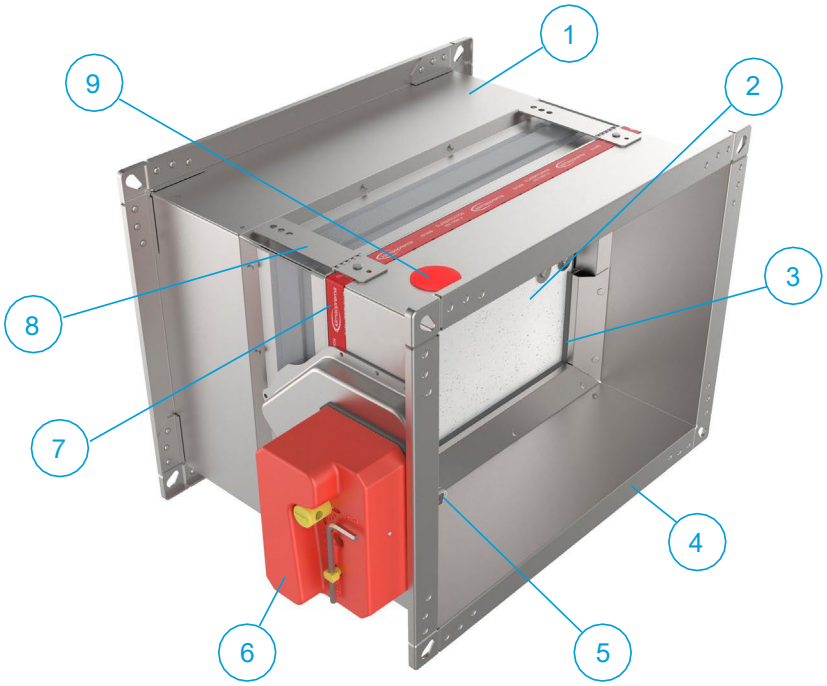

1. Galvanized steel casing
2. Fire resistant damper blade
3. Intumescent joint
4. Connection flanges
5. Thermal fuse
6. Actuator
7. Wall limit mark label
8. Fixing bracket
9. Inspection hatch (optional)

PRODUCT OVERVIEW

Fire dampers FD are used for prevention of fire spread trough the ventilation ducts and between fire sections. Fire dampers consist of steel sheet case, calcium silicate damper blade, damper blade mechanism outside of the airflow and a manual, electromagnetic or electric actuator.

Fire damper case is made out of galvanized steel sheet. Variants produced from stainless steel and powder coated steel are also available. Calcium silicate blade is equipped with brass bearings and seals made out of polyurethane and elastomer rubber.

Fire dampers FD25 are produced up to size 800x600 and have 25 mm thick damper blade. Fire dampers FD40 are produced in sizes 800x600 up until 1500x800 and have 40 mm thick damper blade.

FD25 fire dampers are equipped with R25 manual mechanism and FD40 fire dampers are equipped with R40 manual mechanism.
Manual spring return mechanism is equipped with thermal fuse that is triggered automatically when the temperature inside the duct reaches 72 °C. It can also be activated manually by the push of the button on the mechanism .
Additionl equipment for manual mechanism include end contact switches for damper position signalling. Electromagnetic actuators feature spring return mechanism with electromagnet for remote activation. Additional equipment for electromagnetic mechanism include end contact switches for damper position signalling. Rearming of the electromagnetic actuator is manual.
Fire dampers with electric actuators are equipped with Belimo actuator drives in 24 V or 230 V versions. Activation of fire dampers equipped with electric drives can be via 72 °C or 95 °C thermal fuse or remotely via control signal. Rearming of the electric fire damper can also be done remotely via control signal. All electric actuators are equipped with end switches for position signalling.
ATEX rated versions of fire dampers can be delivered with Schischek 24 V / 230 V electric actuators that are rated for installation in explosive atmosphere areas.

All fire dampers are tested according to the EN 1751 for airtightness and retain class 3 leakage on the closed damper blade and class C on the casing air leakage.

* The images shown are for illustration purposes only and may not be an exact representation of the product.

Product label

1 - Casing air leakage classification
2 - Serial number
3 - Production date
4 - Type
5 - Dimension of the fire damper
6 - Mechanism type
7 - Nominal voltage
8 - Signalisation (end contacts)
9 - IP protection
10 - Free space
11 - Thermal fuse temperature
12 - Number of the European standard and year of its publication
13 - Declaration of performance
14 - Classification according to EN 13501-3
15 - Barcode
16 - Location-if specified
17 - CE- Classification
18 - Notified body Products Regulation

* The images shown are for illustration purposes only and may not be an exact representation of the product.

Models

Casings

FD25
Fire damper with 25 mm damper blade and fire classification up to EI120S.
Sizes range from 100x200 till 800x600.

FD40
Fire damper with 40 mm damper blade and fire classification up to EI120S.
Sizes range from 800x600 till 1500x800.

FD25 - APP
Fire damper with integrated Applique installation kit with 25 mm damper blade and fire classification up to EI90S.
Sizes range from 100x200 till 800x600.

FD25 - MF1
Fire damper with integrated MF1 installation frame with 25 mm damper blade.
Sizes range from 100x200 till 800x600.

FD25/FD40 - MF2
Fire damper with integrated MF2 installation frame with and fire classification up to EI90S. Sizes range from 100x200 till 1500x800.

Product specifications

Nominal sizes FD25	100x200 - 800x600 [mm]	
Nominal sizes FD40	800x600 - 1500x800 [mm]	
Casing length	350 mm	
Temperature range	-20 °C ... 50 °C	
Release temperature	72 °C (standard) or 95 °C (optional with electric actuator)	
Volume flow rate range	Electric drive	up to 12m/s
	EMS Manual drive	up to 10m/s
Differential pressure ranges	up to 1.000 Pa	
Casing air leakage	Class C, EN 1751	
Closed blade air leakage	Class 3, EN 1751	
Upstream velocity	< 10 m/s	
EC conformity	EN 13501-3, EN 1366-2, EN 15650, EN 1751, EN 15882-2-2015	
Declaration of performance	DoP 710 xxx	

Actuators

R (R-S)
Manual operating mechanism, optionally with end switches (R-S). In case of fire, the fire damper closes automatically. Damper closing can be initiated either by thermal fuse melting, or by manual activation on the operating mechanism. Upon closure, damper blade is locked in closed position and can only be opened manually. Thermal fuse melting point is 72 °C.

EMS-S
Electromagnetic operating mechanism, comes with end switches as standard. In case of fire, the fire damper closes automatically. Damper closing can be initiated either by thermal fuse melting or remotely by triggering the electromagnet. Electromagnet is constantly under power and activates closing of the damper blade in case the power cuts out. Upon closure, damper blade is locked in closed position and can only be opened manually. Thermal fuse melting point is 72 °C.

M230-S/M230-S-ST
Belimo 230 V electro motor operating mechanism, comes with integrated end switches. In case of fire, the fire damper closes automatically.
Damper closing can be initiated either by thermoelectric release device or remotely by triggering the electro motor. Upon closure, damper blade is locked in closed position and can be opened by sending a signal to electro motor. Standard thermoelectric release point is 72 °C, optional 95 °C. M230-S-ST actuator is additionally equipped with connection plug for easy connection with power supply and communication modules.

M24-S/ M24-S-ST
Belimo 24 V electro motor operating mechanism, comes with integrated end switches. In case of fire, the fire damper closes automatically.
Damper closing can be initiated either by thermoelectric release device or remotely by triggering the electro motor. Upon closure, damper blade is locked in closed position and can be opened by sending a signal to electro motor. Standard thermoelectric release point is 72 °C, optional 95 °C. M24-S-ST actuator is additionally equipped with connection plug for easy connection with power supply and communication modules.

EX
ATEX rated fire dampers are equipped with Schischek ExMax-5.10-BF actuators, ExPro-TT thermal switches and ExBox-BF plenum boxes.
Optional casing can be produced in AISI 316 stainless steel.

* The images shown are for illustration purposes only and may not be an exact representation of the product.

FD25/FD40 - R (manual mechanism)

- Automatic closure when the temperature in the duct exceeds 72 °C
- Manual rearming
- Manual unlocking possible for periodical test of fire damper
- Optional with end position switches (-R-S)
- FD25 fire dampers are equipped with R25 manual mechanism
- FD40 fire dampers are equipped with R40 manual mechanism

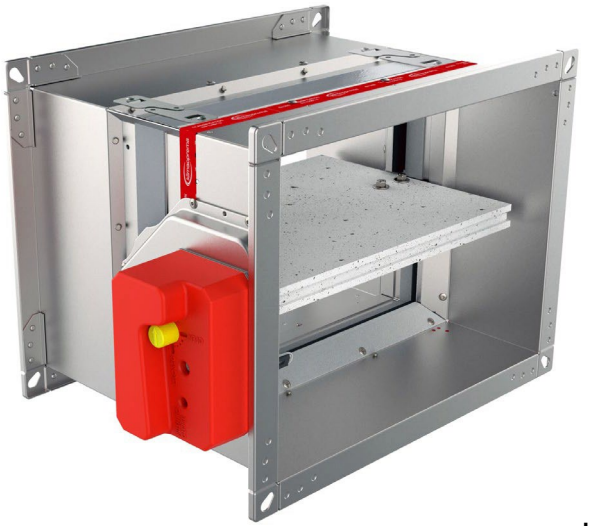

Product	A [mm]	C [mm]	D [mm]	E [mm]
FD 25	55	150	105	150
FD 40	55	200	105	200

B - Width of the fire damper
H - Height of the fire damper
(C+A) x E - Keep clear to provide access for operation

FD25-R25

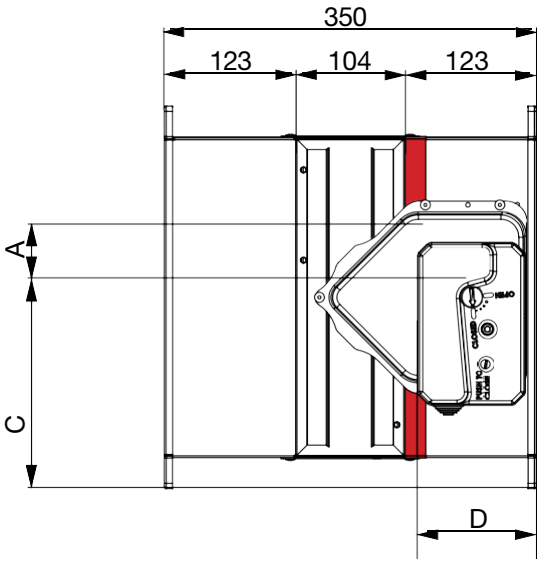

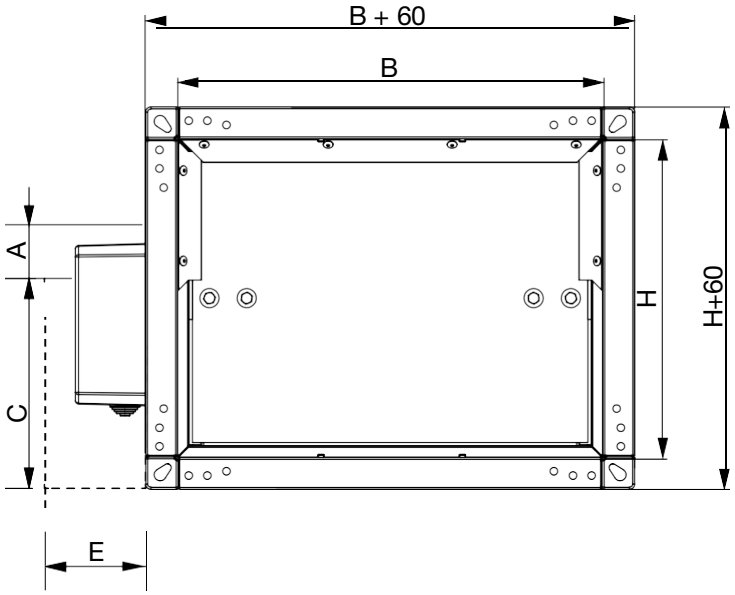

FD40-R40

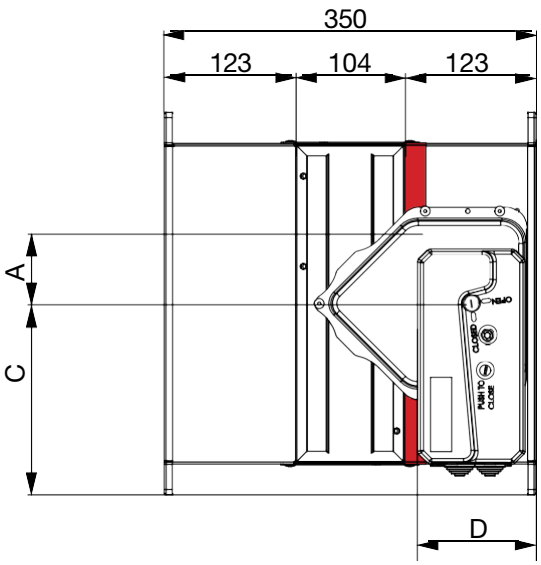

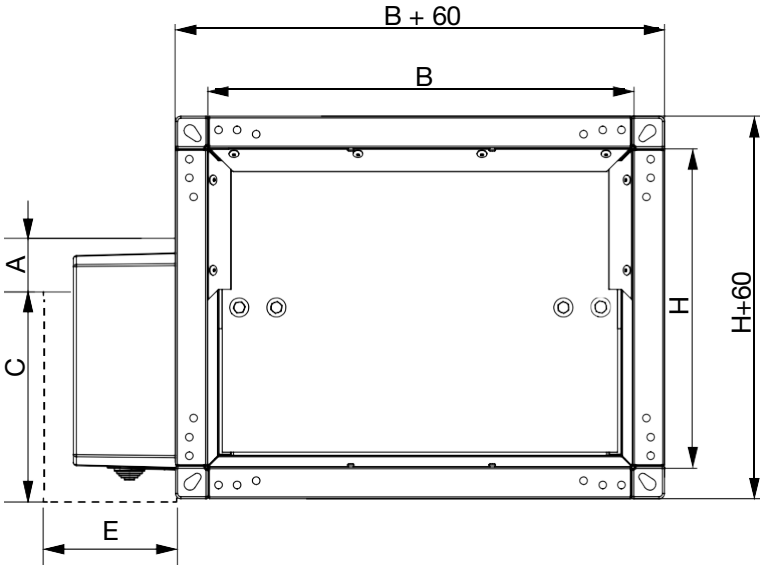

* The images shown are for illustration purposes only and may not be an exact representation of the product.

FD25/FD40 - EMS (solenoid actuator)

- Spring return actuator with integrated limit switches and thermal fuse release mechanism (72 °C)
- Manual rearming
- Possible closing with solenoid
- Manual closing possible
- EMS - solenoid actuator is constantly under power. Actuating mechanism is tripped when the power is interrupted, or thermal fuse is melted.

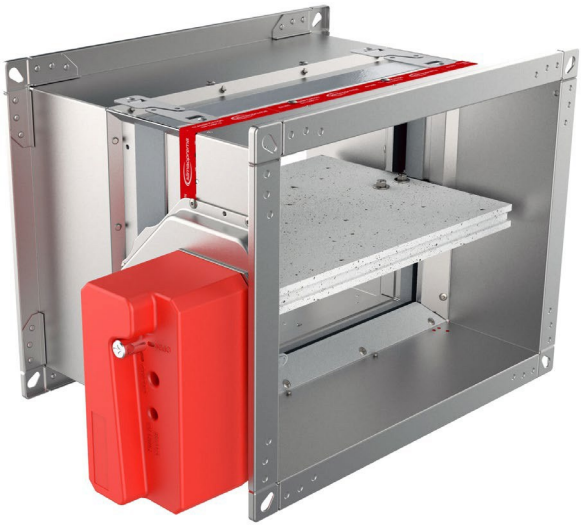

Product	A [mm]	C [mm]	D [mm]	E [mm]
FD 25	55	150	105	150
FD 40	55	200	105	200

B - Width of the fire damper
H - Height of the fire damper
(C+A) x E - Keep clear to provide access for operation

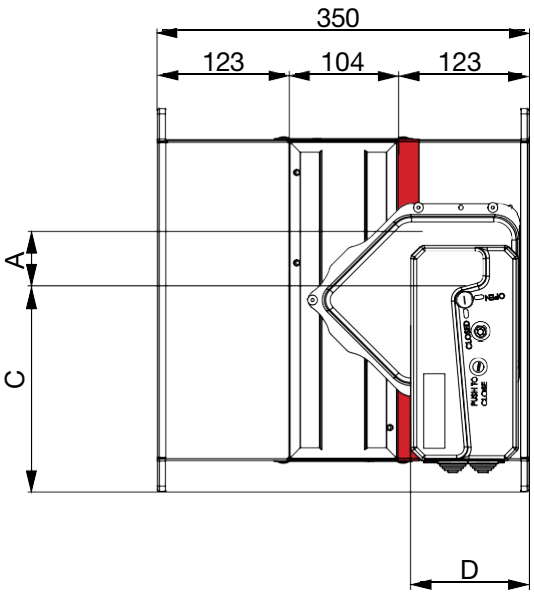

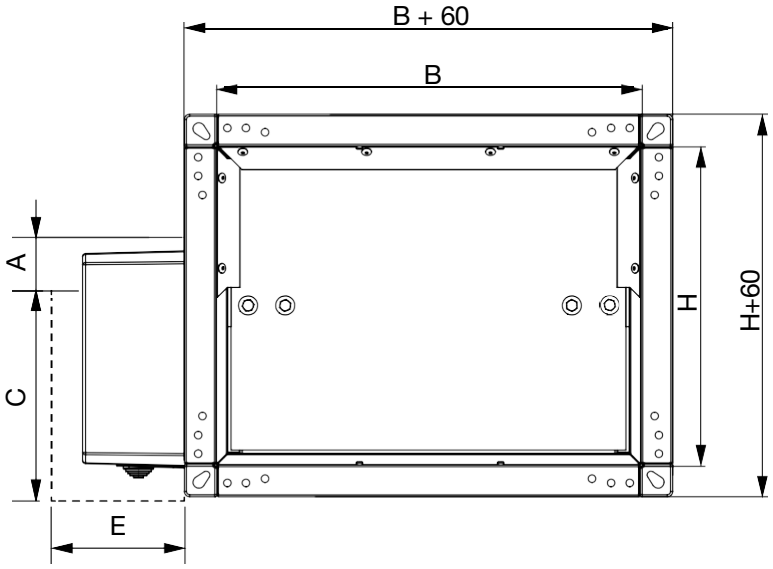

FD25/FD40 - M (electric actuator)

- Thermoelectric release device (72 °C) with electric actuator and return spring
- Integrated end switches
- Fully automatic operation
- Optional 95 °C thermoelectric release device for warm air installations

Actuator	A [mm]	C [mm]	D [mm]	E [mm]
BFL (M)	25	200	90	120
BFN (M)	25	225	100	120
BF (M)*	50	250	100	120

B - Width of the fire damper
H - Height of the fire damper
(C+A) x E - Keep clear to provide access for operation

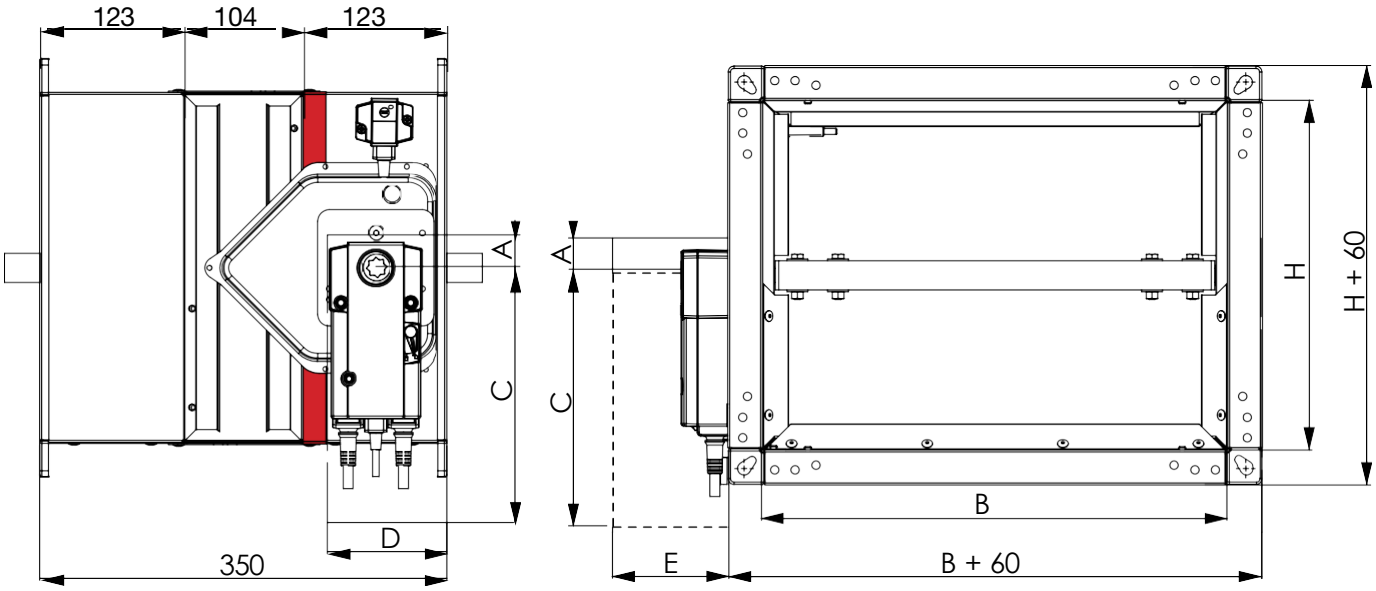

* The images shown are for illustration purposes only and may not be an exact representation of the product.

FD25/FD40 - EX (electric actuator)

- Thermoelectric release device (72 °C) with electric actuator and return spring
- Integrated end switches
- Fully automatic operation
- The EX version of the damper comes with:
  1) Safety temperature trigger Schischek ExPro-TT
  2) Electric actuator Schischek ExMax-5.10-BF
  3) Terminal box Schischek ExBox-BF

Ex classification of product:

II 2G Ex h IIC T6 Gb

II 2D Ex h IIIC T80°C Db

For more information about Ex classification, visit website
Type Examination Certificate Number: FIDI 21 ATEX D059. Equipment complies with the essential health and safety requirements relating to the design and construction of equipment intended to use in potentially explosive atmospheres given in annex VIII of the directive ATEX 2014/34/EU.

Please consult latest Declaration of conformity on our website

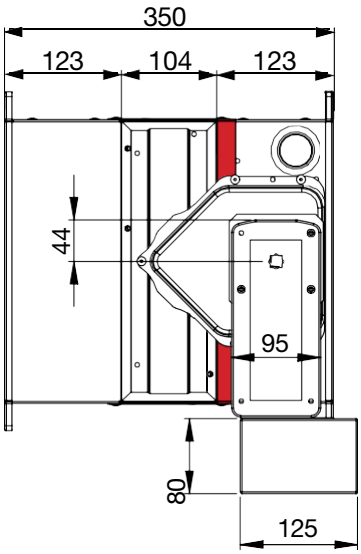

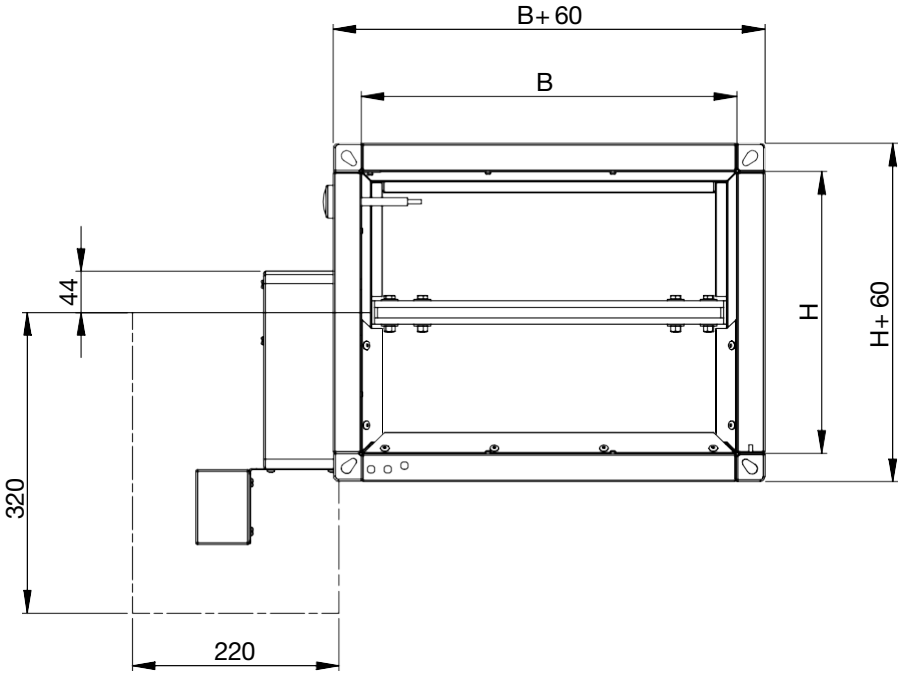

* The images shown are for illustration purposes only and may not be an exact representation of the product.

FD25 - APP
Applique installation frame

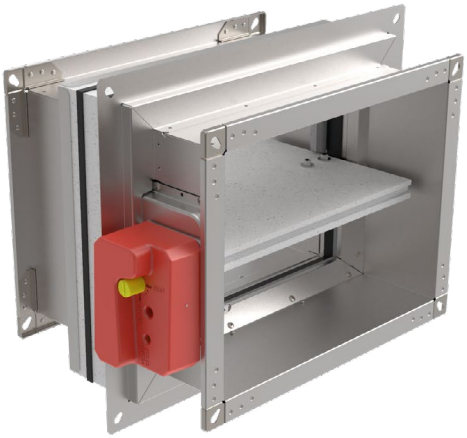

- Fire damper with integrated Applique installation kit with 25 mm damper blade for quick and easy installation in rigid and flexible walls
- Made out of calcium silicate boards
- Fire classification up to EI90S.
- Sizes range from 100x200 till 800x600.
- Quick wall mounting with screws, 4 pcs 4,8x60 mm
- Factory assembled to the fire damper

Actuator	A [mm]	C [mm]	E [mm]
FD 25	55	150	150
FD 40	55	200	200
BFL (M)	25	200	120
BFN (M)	25	225	120

B - Width of the fire damper
H - Height of the fire damper
(C+A) x E - Keep clear to provide access for operation

FD25-APP-R

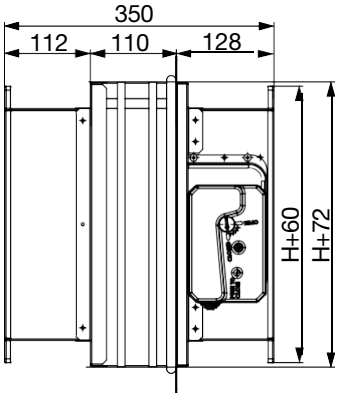

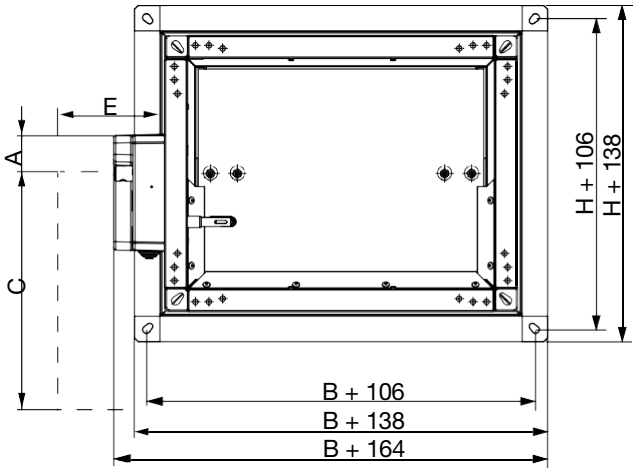

FD25-APP-EMS

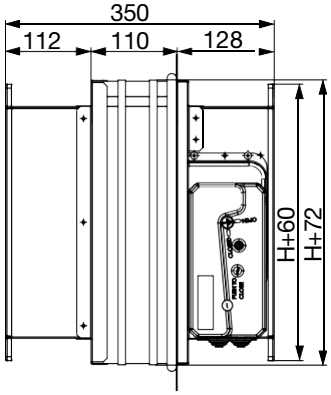

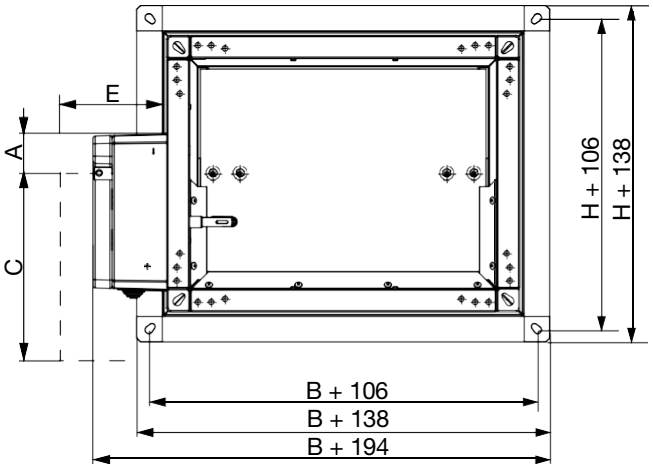

FD25-APP-M

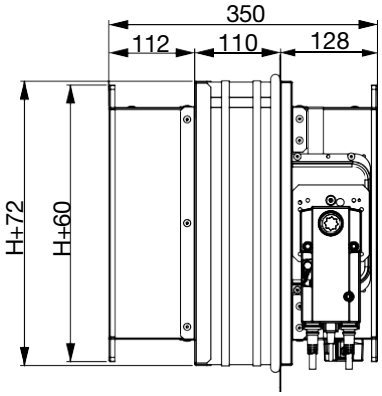

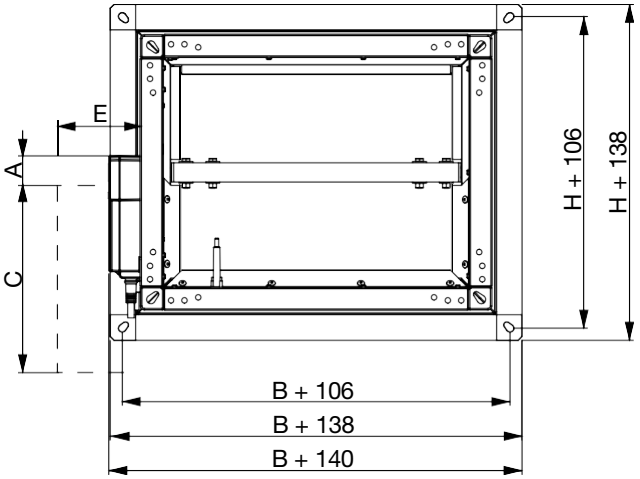

FD25
MF1 installation frame

- Fire damper with integrated MF1 installation frame with 25 mm damper blade for quick and easy installation on rigid and flexible walls
- Sizes range from 100x200 till 800x600.
- Made out of calcium silicate boards
- Quick wall mounting with screws, 4 pcs, 6x140 mm
- Factory assembled to the fire damper

Actuator	A [mm]	C [mm]	E [mm]
FD 25	55	150	150
FD 40	55	200	200
BFL (M)	25	200	120
BFN (M)	25	225	120

B - Width of the fire damper
H - Height of the fire damper
(C+A) x E - Keep clear to provide access for operation

FD25-MF1-R

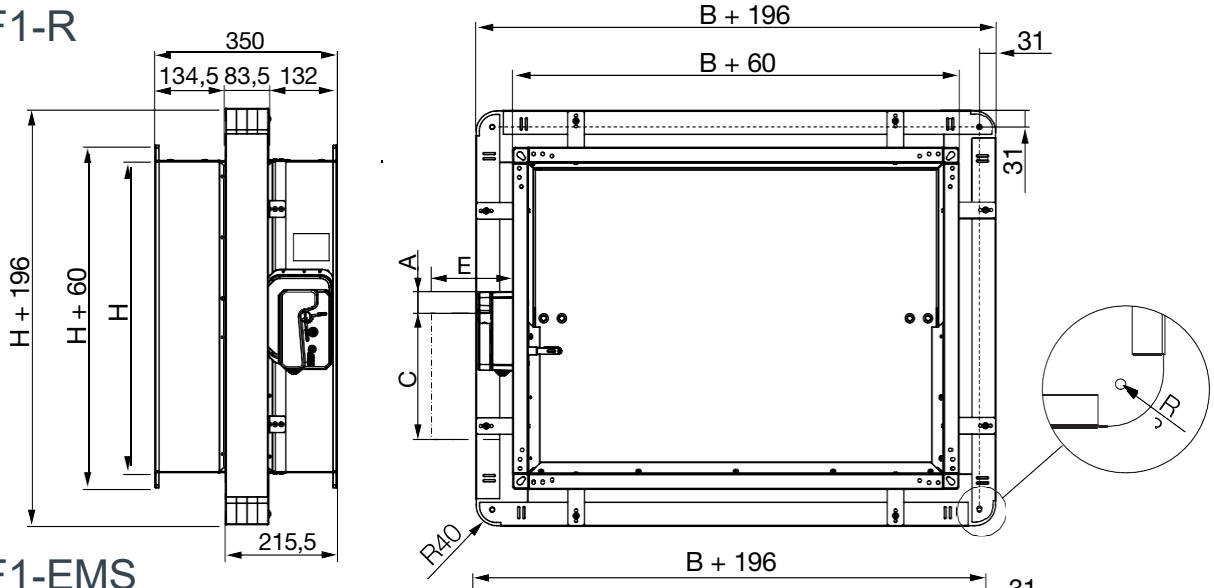

FD25-MF1-EMS

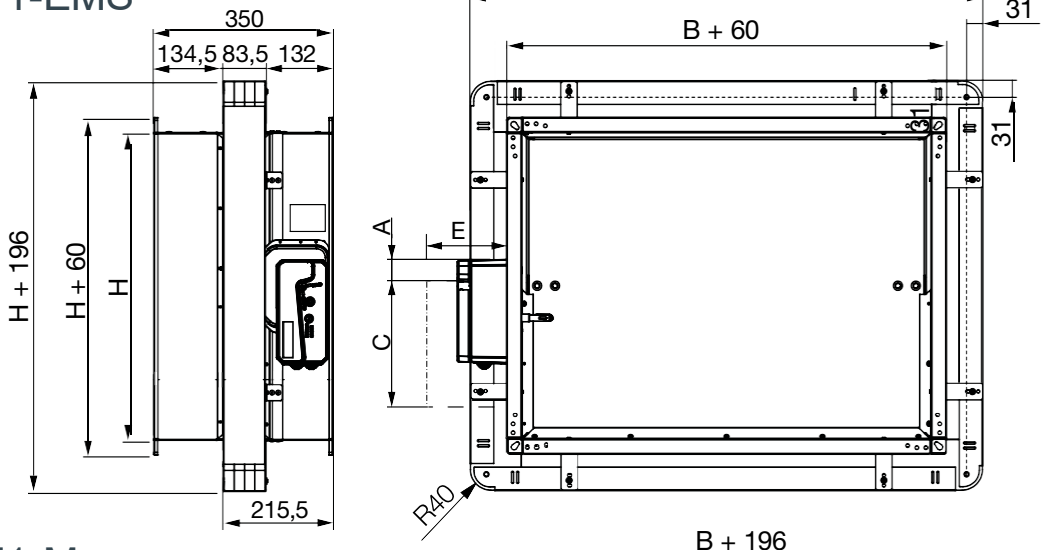

FD25-MF1-M

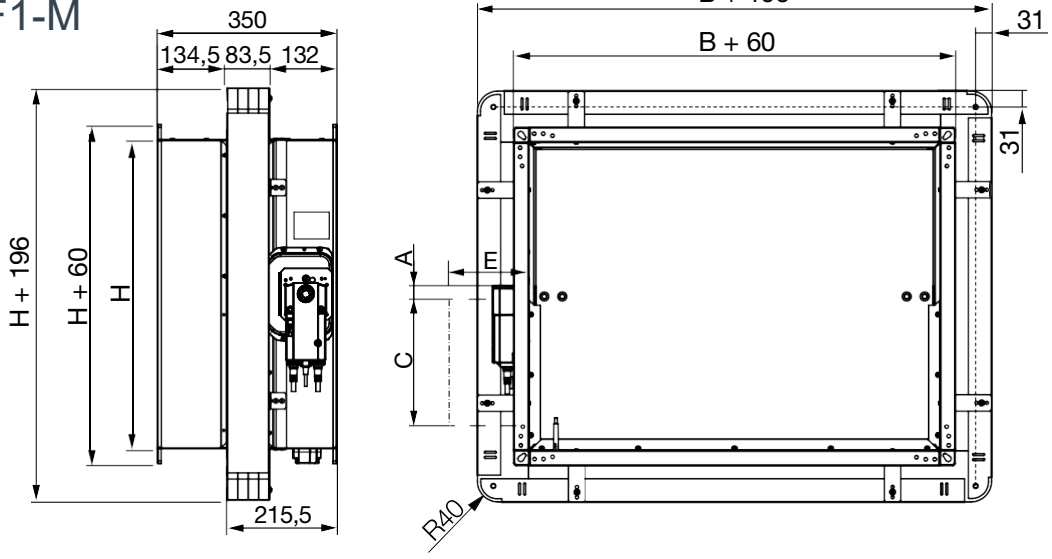

FD25/FD40
MF2 installation frame

- Fire damper with integrated MF2 installation frame with and fire classification up to EI90S for quick and easy installation on rigid and flexible walls
- Sizes range from 100x200 till 1500x800.
- Made out of calcium silicate boards
- Quick wall mounting with screws, 12 pcs, 6x140 mm
- Factory assembled to the fire damper

Actuator	A [mm]	C [mm]	E [mm]
FD 25	55	150	150
FD 40	55	200	200
BFL (M)	25	200	120
BFN (M)	25	225	120
BF (M)	50	250	120

B - Width of the fire damper
H - Height of the fire damper
(C+A) x E - Keep clear to provide access for operation

FD25-MF2-R

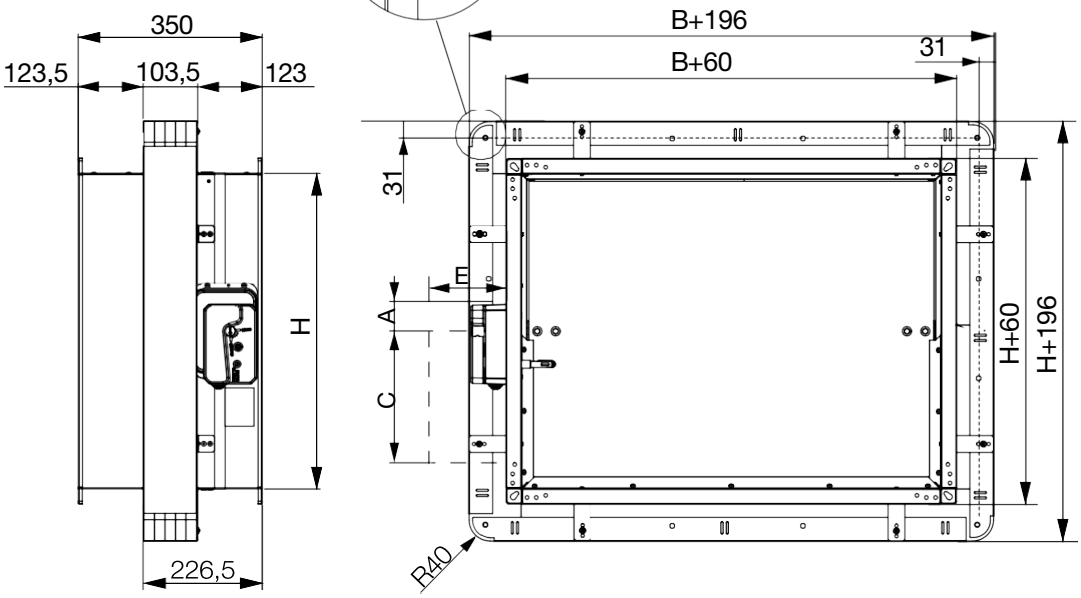

FD25-MF2-EMS

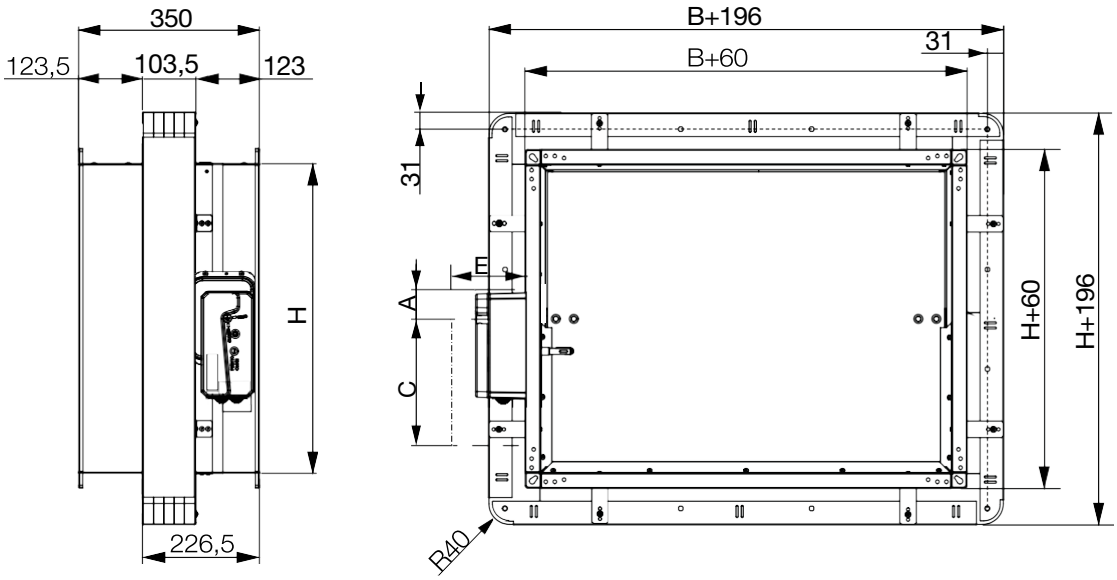

* The images shown are for illustration purposes only and may not be an exact representation of the product.

FD40-MF2-R / FD40-MF2-EMS

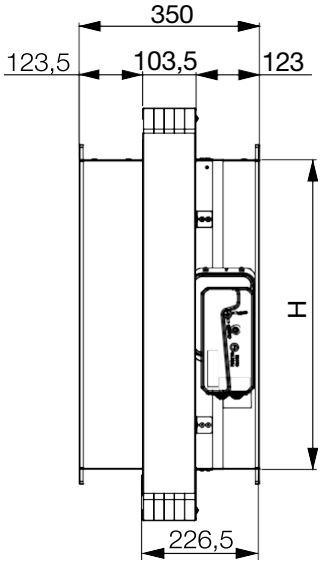

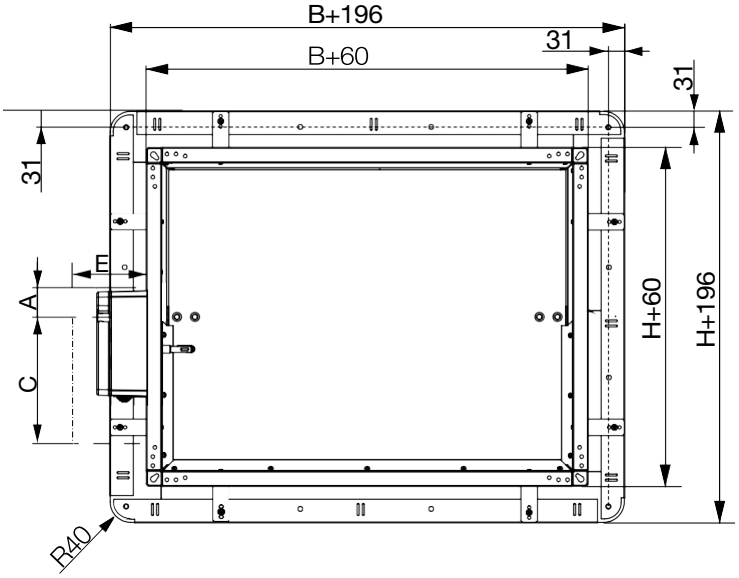

FD25-MF2-M

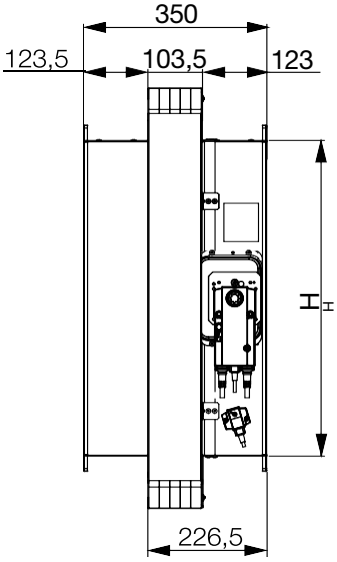

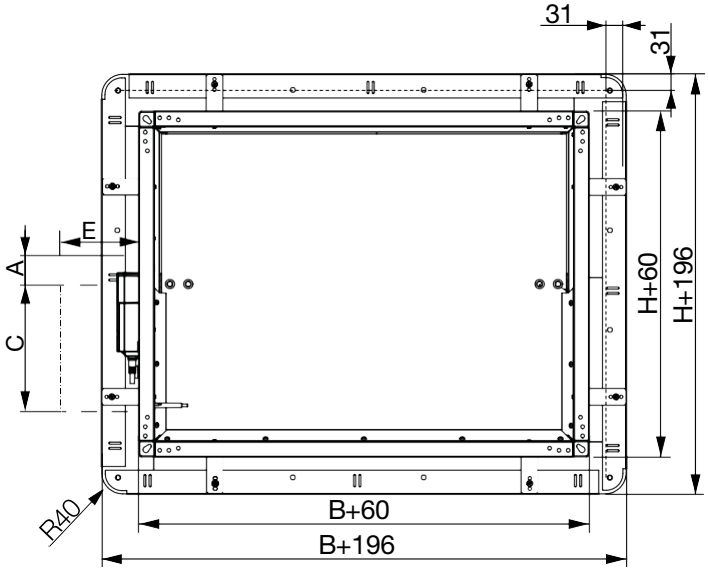

FD40-MF2-M

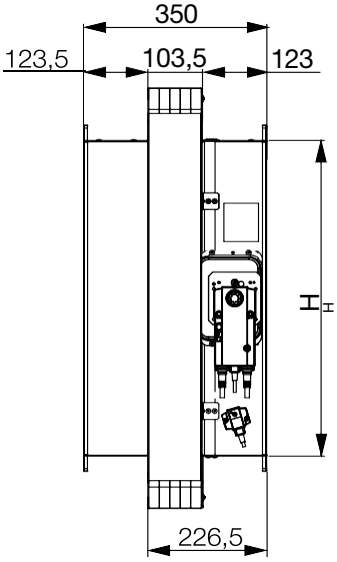

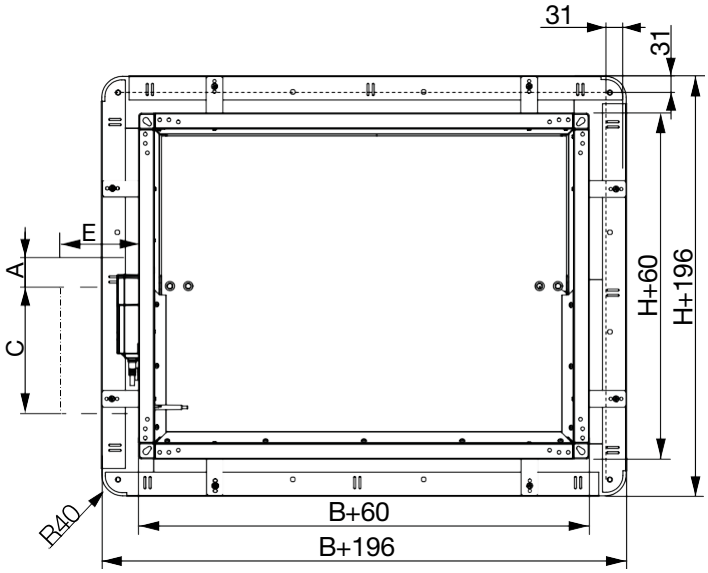

* The images shown are for illustration purposes only and may not be an exact representation of the product.

INSTALLATION

The FD25/FD40 fire damper is always tested in standardized support frames (both in concrete and flexible walls) according to EN 1366-2:2015 Tables 3/4/5. The results obtained are valid for all similar support frames with a thickness, density, and/or fire resistance rating that is equal to or exceeds that of the test structure.

The duct connected to the fire damper must be supported or suspended in such a way that the damper does not bear its own weight. The damper must not support any parts of the surrounding structure or wall that could be damaged and cause the damper to fail.

Recommended:
Connect the fire damper to flexible connectors (see accessory FD-A-FLEX) both ends when installing them in:

- Lightweight walls
- Lightweight shaft walls
- Soft bulkhead systems
- Solid wood walls

Install the compensator so, that the flexible part has a minimum distance of 50 mm from the edge of a damper‘s blade in open position.

The damper driving mechanism can be placed on either side of the wall, however it needs to be placed so as to ensure easy access during inspection. Mounting is possible with the blade axis in horizontal or in vertical position.

- The installation must comply with the tests that were performed during certification
- Avoid any obstruction of the moving blade by the connected ducts
- The class of air-tightness is maintained in case the installation of the damper is made in accordance with the technical manual
- Operating temperature: 50 °C max
- For indoor use only

The recommended / maximum installation opening is in the table below. The smallest installation opening is where there is enough space to install the seal!

Type of sealing	Recommended opening	Maximum opening
Mortar	B(H) + 80	B(H) + 150
Mineral wool	B(H) + 80	B(H) + 120
Fire Batt/Weichschott	B(H) + 300	B(H) + 450

All dampers can be installed with the blade axis in a horizontal position or a vertical position in all installation types except installation remote from the wall and battery installation.

The fire damper must be installed into a fire partition structure in such a way that the damper blade in its closed position is located inside this structure (except for installation with Applique/MF1/MF2 installation frame).

Casing extension pieces

If the height of the fire damper is more than H=350mm, the damper blade will protrude outside of the casing when in an open position. Exact dimension X can be calculated using the following formula:

X=(H/2)-175 [mm]

Use of extension pieces (FD-A-EXT) is mandatory when safety grilles (FD-A-SG), flexible duct connections (FD-A-FLEX), or circular connections (FD-A-CIRC) are used on fire dampers with height H > 350mm.

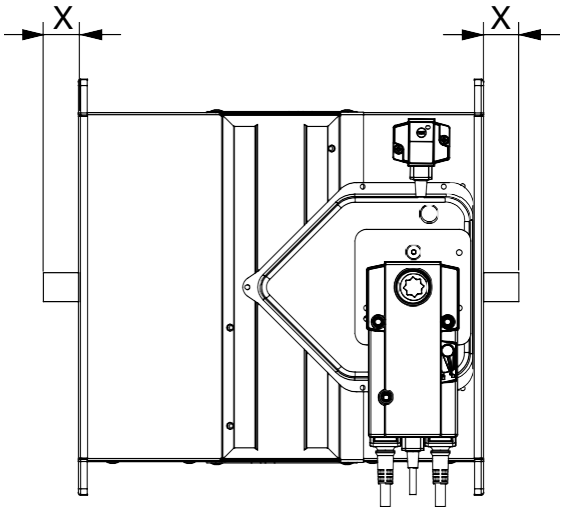

Flange connection detail

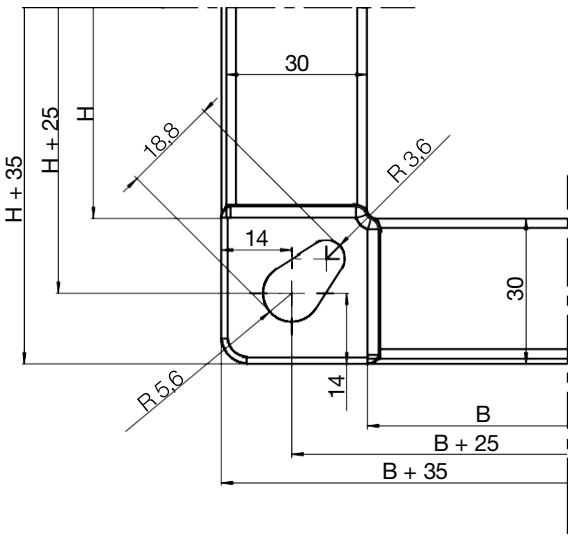

* The images shown are for illustration purposes only and may not be an exact representation of the product.

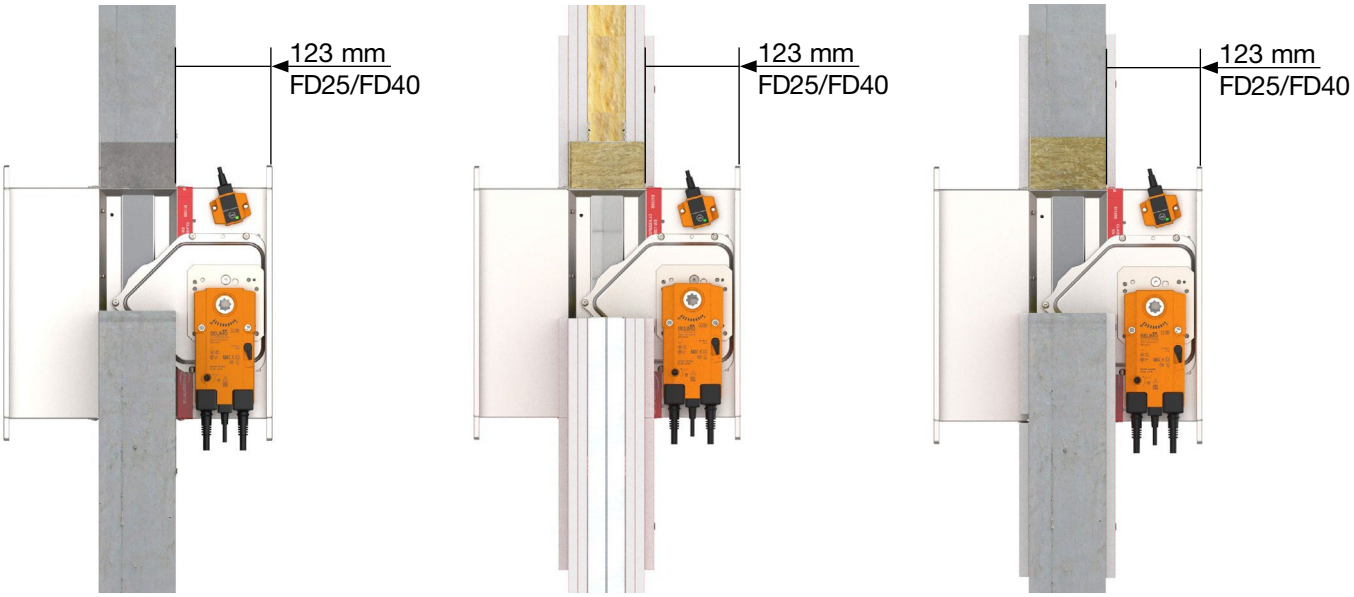

Assembly aid / Installation depth

To help you find the suspension plane, a bendable fixing bracket is provided on the damper body (the use of bendable fixing brackets is not required to meet the classification but they need to be bent up or broken in case they are not used. They must not stay in flat position.)) and the red tape is placed on the casing to mark the location of the wall/ceiling limit (distance from wall / ceiling limit to the end of fire damper is 123 mm).

This does not apply for Applique/MF1/MF2 kit installations. Check the operation of the fire damper before commencing the installation!

ASSEMBLY AID WITH FIXING BRACKET

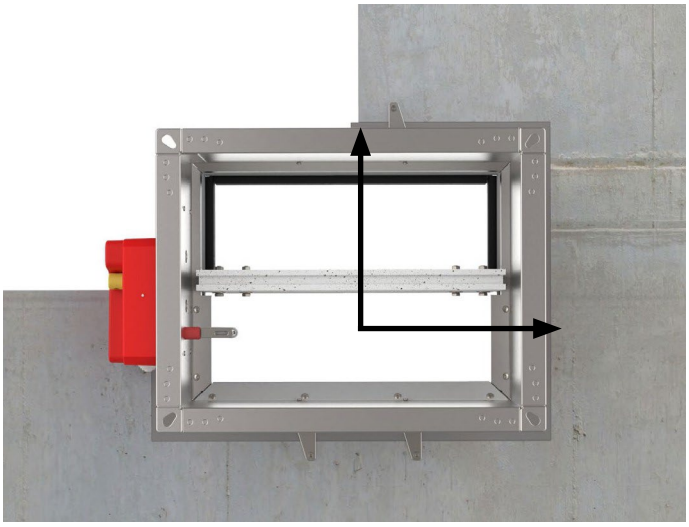

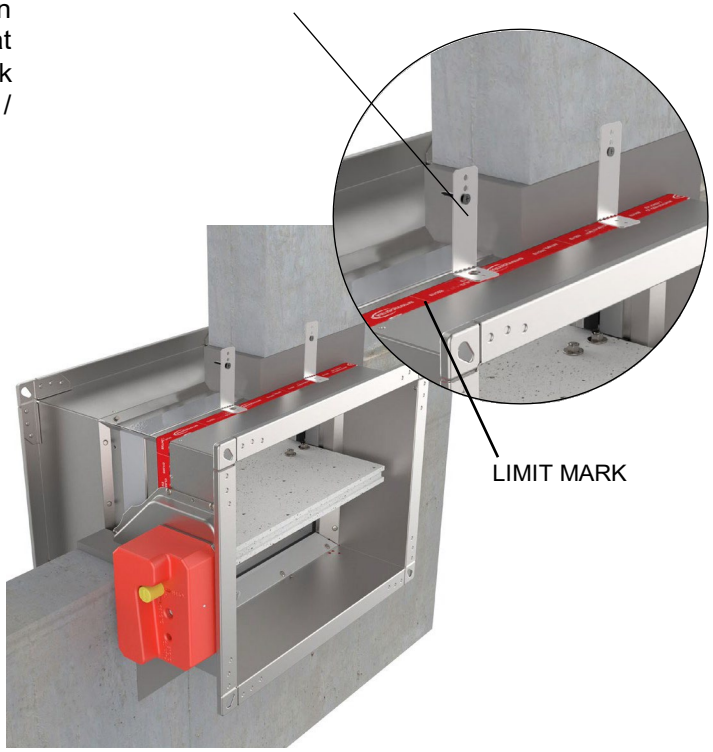

Support for installation with mortar

In fire damper installations with mortar, it may be necessary to use wooden supports to prevent the casing from deforming while mortar is getting hardened. Before filling the gap between wall and fire damper, close the damper blade and install the wooden supports as seen in the drawings below.
Place the wooden support as close as possible to the fire damper blade!

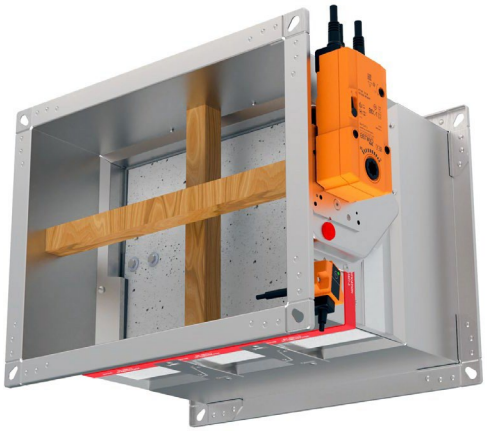

Site Installation Considerations

A marked difference may exist between laboratory test configurations and the practical realities of on-site installation. In addition, national guidance may impose specific requirements for the installation of fire dampers. It is therefore important to consult the relevant national and industry guidance documents before installation.

UK Guidance

Within the UK, fire dampers should be independently supported from the ductwork. Depending on the wall construction, additional support may be required to reduce or eliminate any load transferred to the wall, particularly where the wall is of non-load-bearing construction.

Fire dampers should also be installed so that, in the event of a fire, thermal expansion of the ductwork does not force the damper through the supporting structure. This is typically achieved through the use of a breakaway joint.

Further information can be found in the *ASFP Grey Book, Volume 1, Edition 3*, and other recognised industry guidance documents.

Independent Support Guidance

The ThermShield Fire Damper has been tested in accordance with BS EN 1366-2. As part of the BS EN 1366-2 test procedure, a plenum box is rigidly fixed to the damper casing and connected to a duct and fan assembly to enable leakage measurements for classification purposes.

No additional or independent support mechanisms were fitted during laboratory testing. Consequently, there is no certification requirement for additional supports in order to maintain the fire resistance classification achieved by the damper.

Support Methodology

The method of support is intentionally non-prescriptive, as it did not form part of the original BS EN 1366-2 test configuration. Any independent support provided is intended to enhance the installation and not to replicate the support arrangement used during testing.

Any support mechanism employed shall be fully capable of supporting the weight of the damper and any associated loads. A recommended method is the use of a Unistrut support cradle or sling installed beneath the damper and suspended using appropriately sized threaded drop rods.

IMAGE OF UNISTRUT SLING, DROP ROD GUIDANCE BELOW

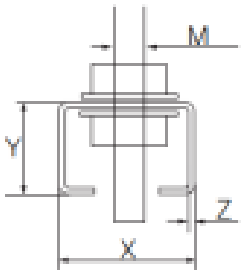

Threaded Rod Load Capacity Guidance

Dia	Nominal Stress Area $A_{s,nom}$ (mm²)	Load Capacity of Threaded Rod for Fire Resistance of 30mins or 60mins (Max Tensile Stress σ 9N/mm² Vertical orientated components)		Load Capacity of Threaded Rod for Fire Resistance of 90mins or 120mins (Max Tensile Stress σ 6N/mm² Vertical orientated components)	
		Weight (kg)		Weight (kg)	
		1 Rod	2 Rods	1 Rod	2 Rods
M8	36.6	33.59	67.18	22.39	44.79
M10	58.0	53.23	106.46	35.49	70.97
M12	84.3	77.36	154.73	51.58	103.15
M16	157	144.08	288.17	96.06	192.11
M18	192	176.20	352.41	117.47	234.94

Max tensile stress values are taken from BS EN 15882-1:2011+A1:2017 table 7.

Extension Pieces for Thicker Wall Installations

Where a ThermShield damper is installed within a thicker wall construction, we recommend that the breakaway joint be relocated clear of the wall line. This is achieved by fitting a hard-fixed stub duct to the damper, with the breakaway fixing then positioned outside the wall.

This arrangement ensures the breakaway joint remains fully accessible and functional beyond the wall thickness, rather than being embedded within the construction.

* The images shown are for illustration purposes only and may not be an exact representation of the product.

Rigid wall installation (mortar sealing)

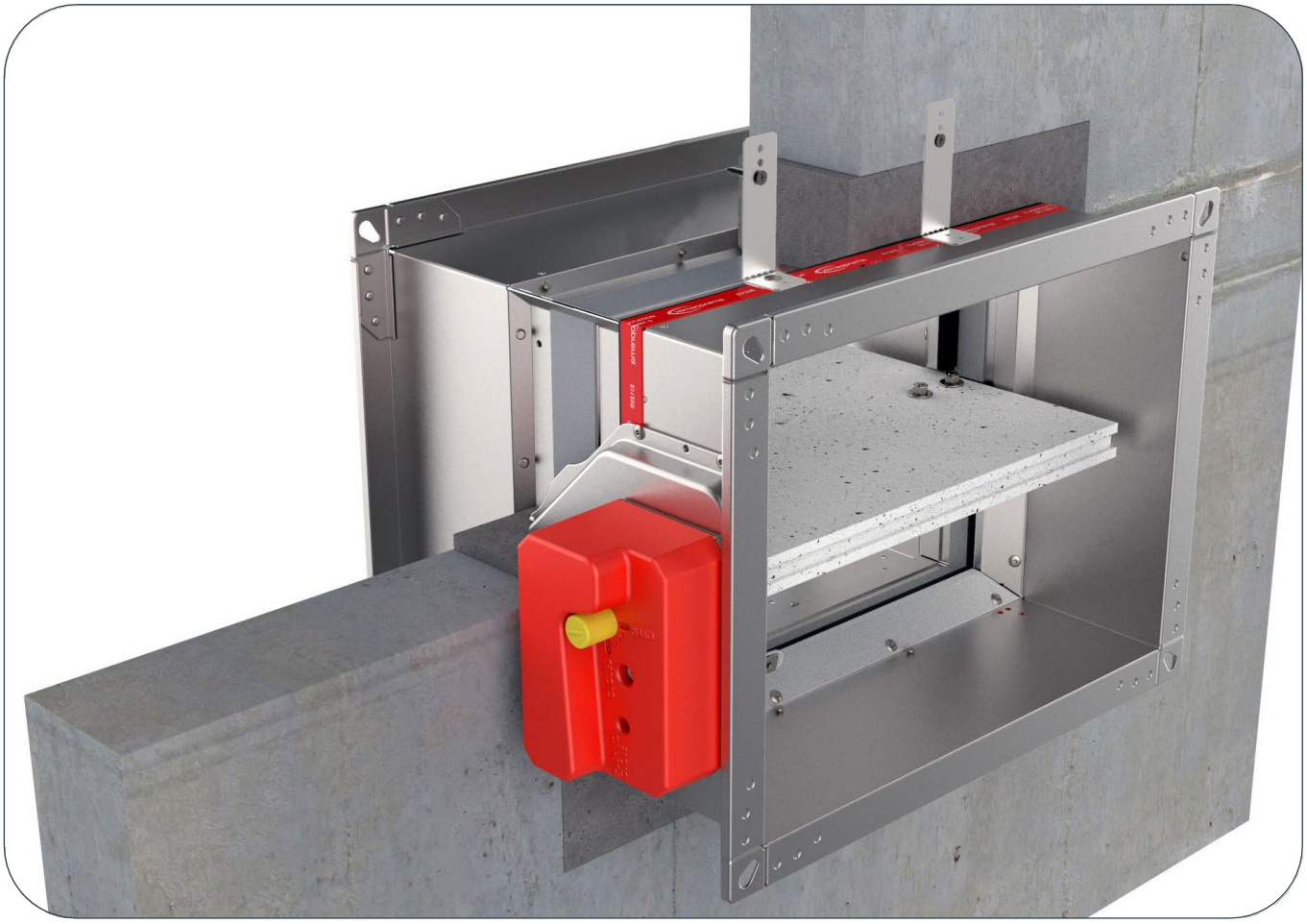

The wall is composed of concrete blocks (minimum density of 450 kg/m^3) or reinforced concrete (minimum density of 2200 kg/m^3) and with a minimum thickness of 100 mm.

Installation material: Gypsum plaster / Mortar

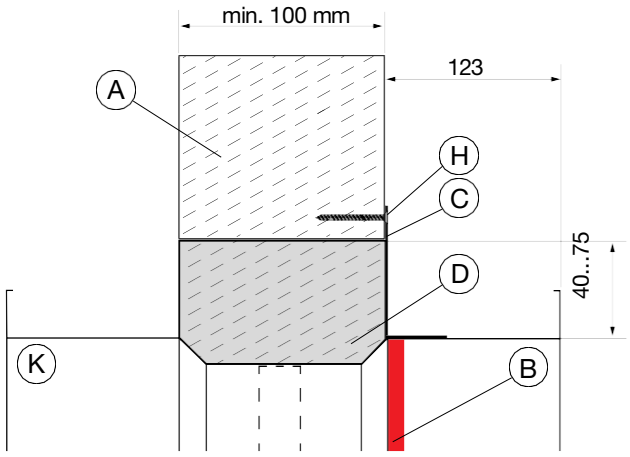

Rigid wall installation

A Rigid wall
B Limit mark
C Fixing bracket with screw hole Ød 6 mm, min length 30 mm
D Gypsum plaster / Mortar sealing
H Masonry screw 6x50 mm (optional)
K Fire damper casing

Classification

FD25: EI 120 (ve i↔o)S

FD40: EI 120 (ve i↔o)S

* The images shown are for illustration purposes only and may not be an exact representation of the product.

DOP WALLS MATERIALS

Possible damper orientations

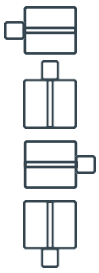

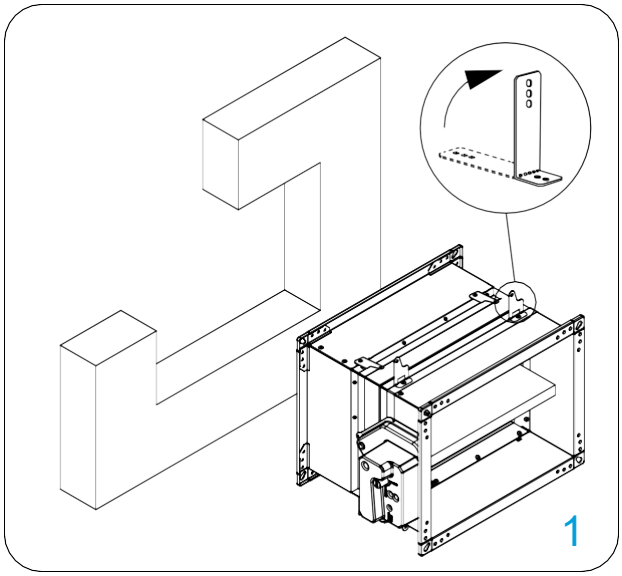

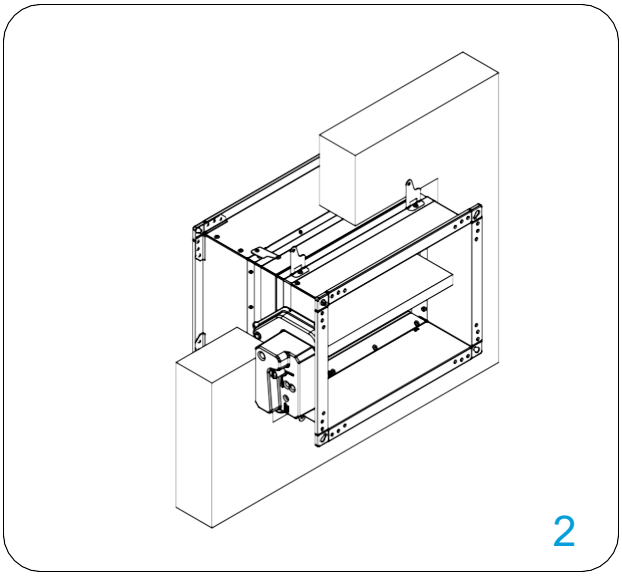

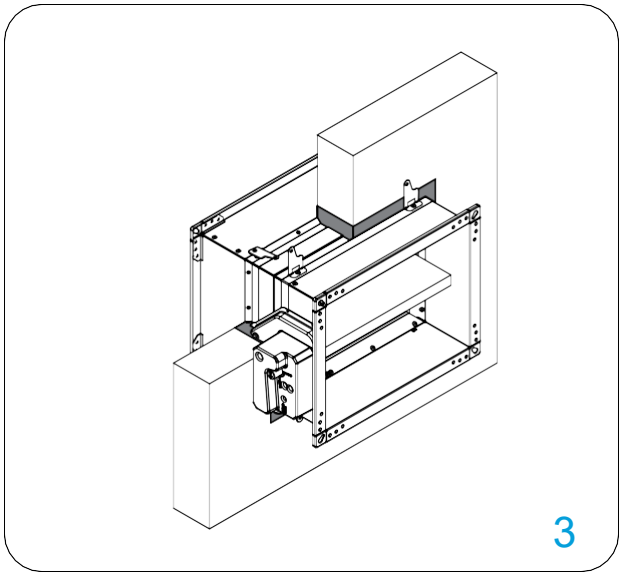

Damper blade must be closed during the installation!

1. Recommended wall opening for the fire damper installation in Gypsum plaster / Mortar B (H) + 80...150 mm. Bend the fixing bracket 90° bracket screw hole is 6 mm in diameter). Place the damper in the opening up to the wall limit mark on the damper.

2. Fix the fire damper to the wall with the screws.

3. Fill the space between casing and wall with mortar.

*Build the support for mortar installation according to the drawing,
*Multiple fire dampers can be installed next to each other or ceiling/wall with the minimal distance.

Test the operation of the damper blade!

* The images shown are for illustration purposes only and may not be an exact representation of the product.

(mineral wool sealing)

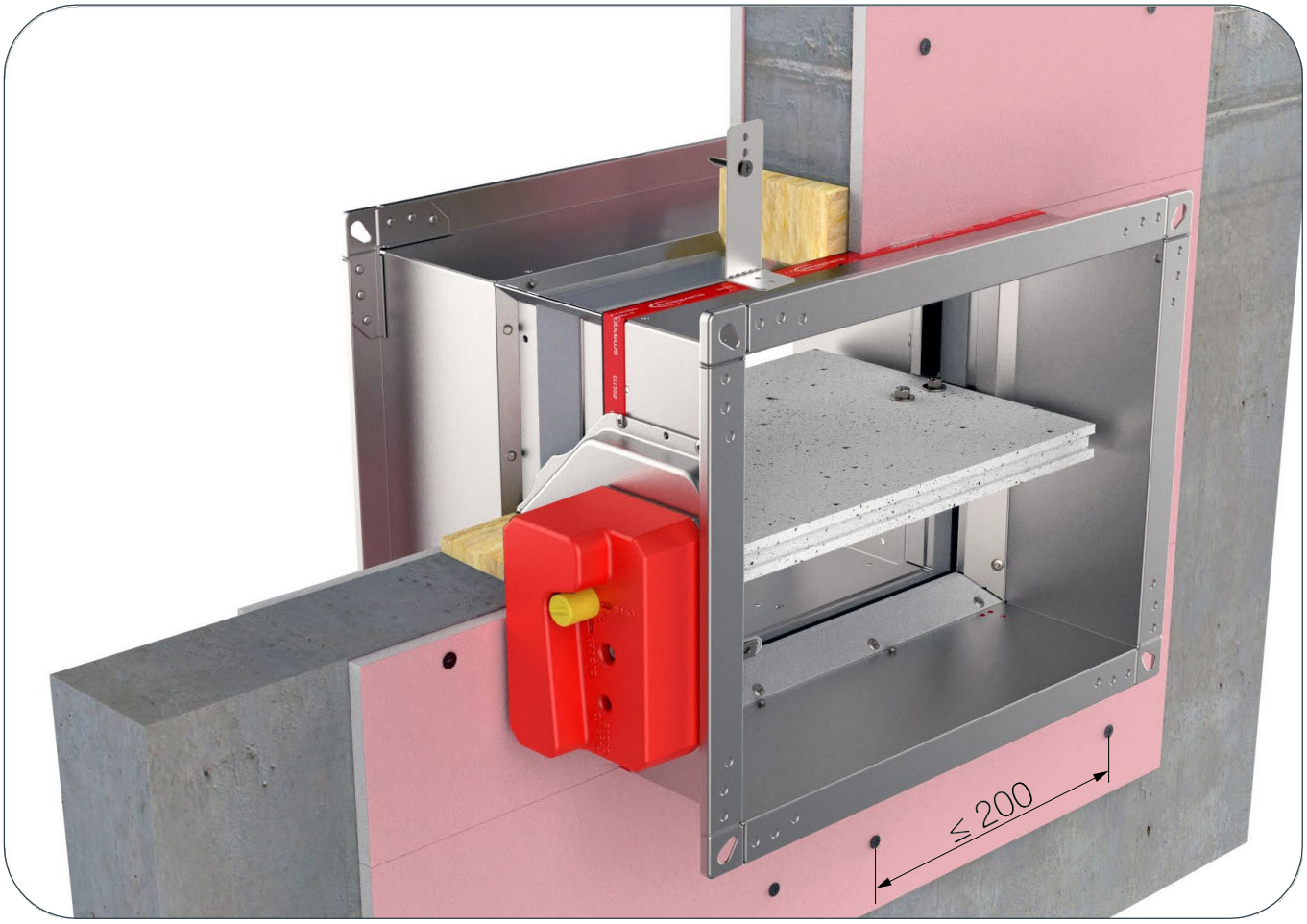

The wall is composed of concrete blocks (minimum density of 450 kg/m^3) or reinforced concrete (minimum density of 2200 kg/m^3) and with a minimum thickness of 100 mm.

Installation material: mineral wool (minimum density of 100 kg/m^3) covered with plasterboard cover boards.

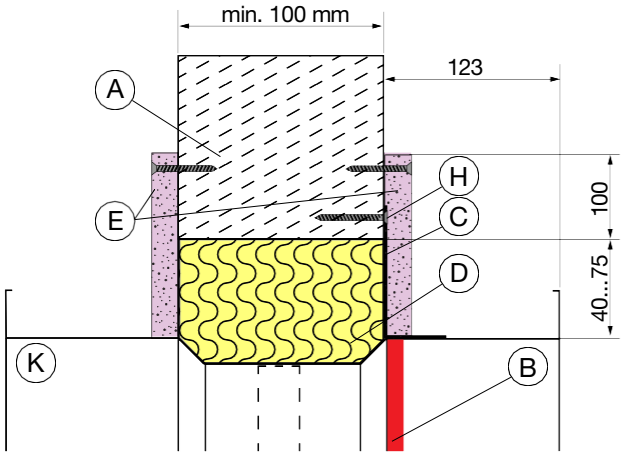

Rigid wall installation

A Rigid wall
B Limit mark
C Fixing bracket with screw hole Ød 6mm, min length 30 mm
D Sealing material, mineral wool, 100 kg/m^3 min.
E GKF cover boards with masonry screw, 35 mm
H Masonry screw 6x50mm (optional)
K Fire damper casing

Classification

FD25: EI 90 (ve i↔o)S
FD40: EI 90 (ve i↔o)S

* The images shown are for illustration purposes only and may not be an exact representation of the product.

DOP WALLS MATERIALS

Possible damper orientations

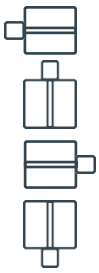

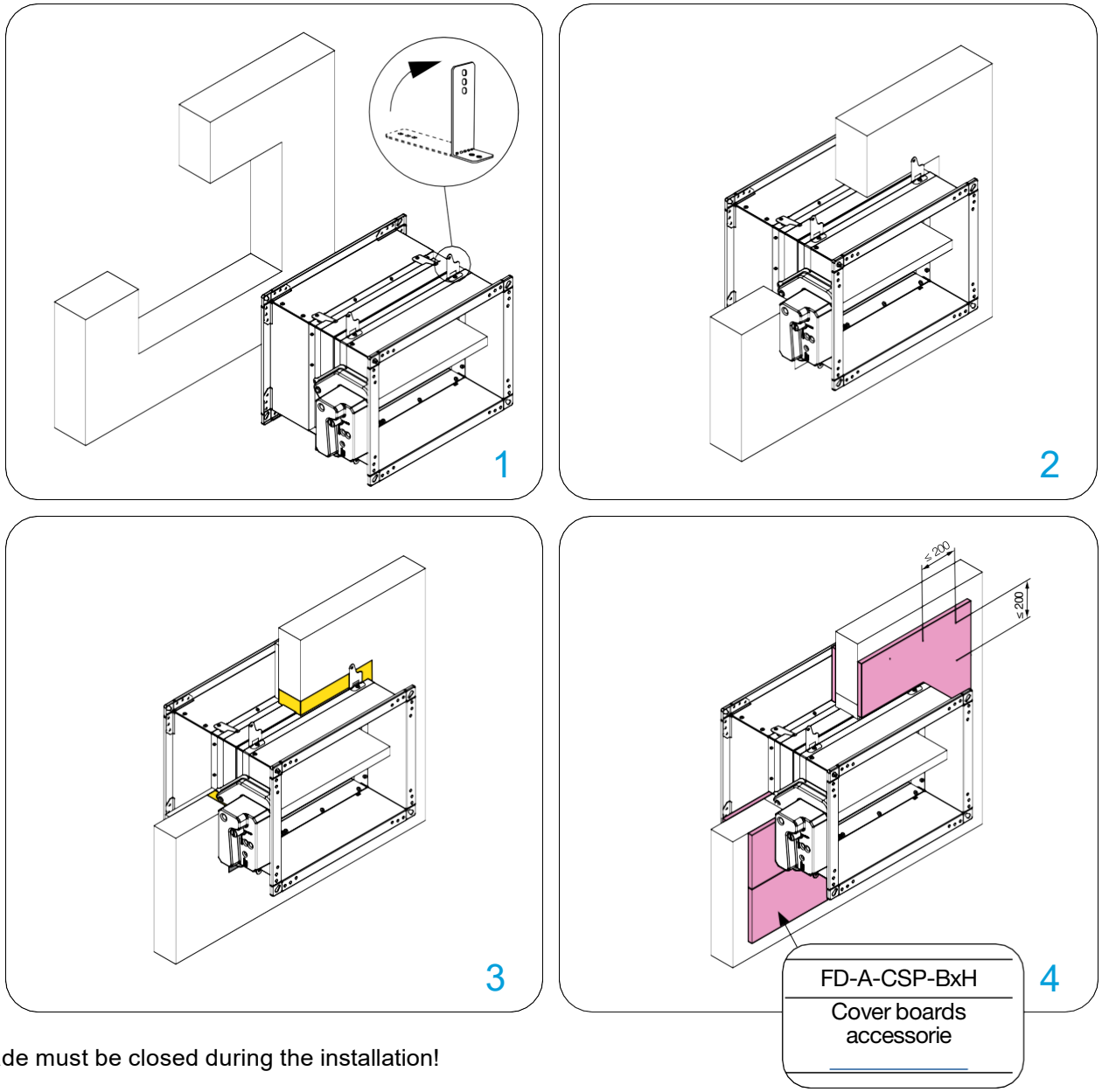

Damper blade must be closed during the installation!

1. Create an opening in the wall (B + 80...150 mm) x (H + 80...150 mm). Bend the mounting bracket by 90°. Insert the damper into the opening up to the limit mark on the damper.

2. For easier installation, the fire damper can be mounted on the wall. Use approved/suitable screws for this purpose. (bracket screw hole is 6 mm in diameter)

3. Fill the space between casing and wall with mineral wool.

4. Cover the wool with 12.5 mm thick gypsum plasterboard or accessories cover boards FD-A-CSP-BxH. Attach the plasterboard all around, using screws spaced <= 200 mm

*Multiple fire dampers can be installed next to each other or ceiling/wall with the minimal distance.

Test the operation of the damper blade!

* The images shown are for illustration purposes only and may not be an exact representation of the product.

(Fire Batt/Weichschott)

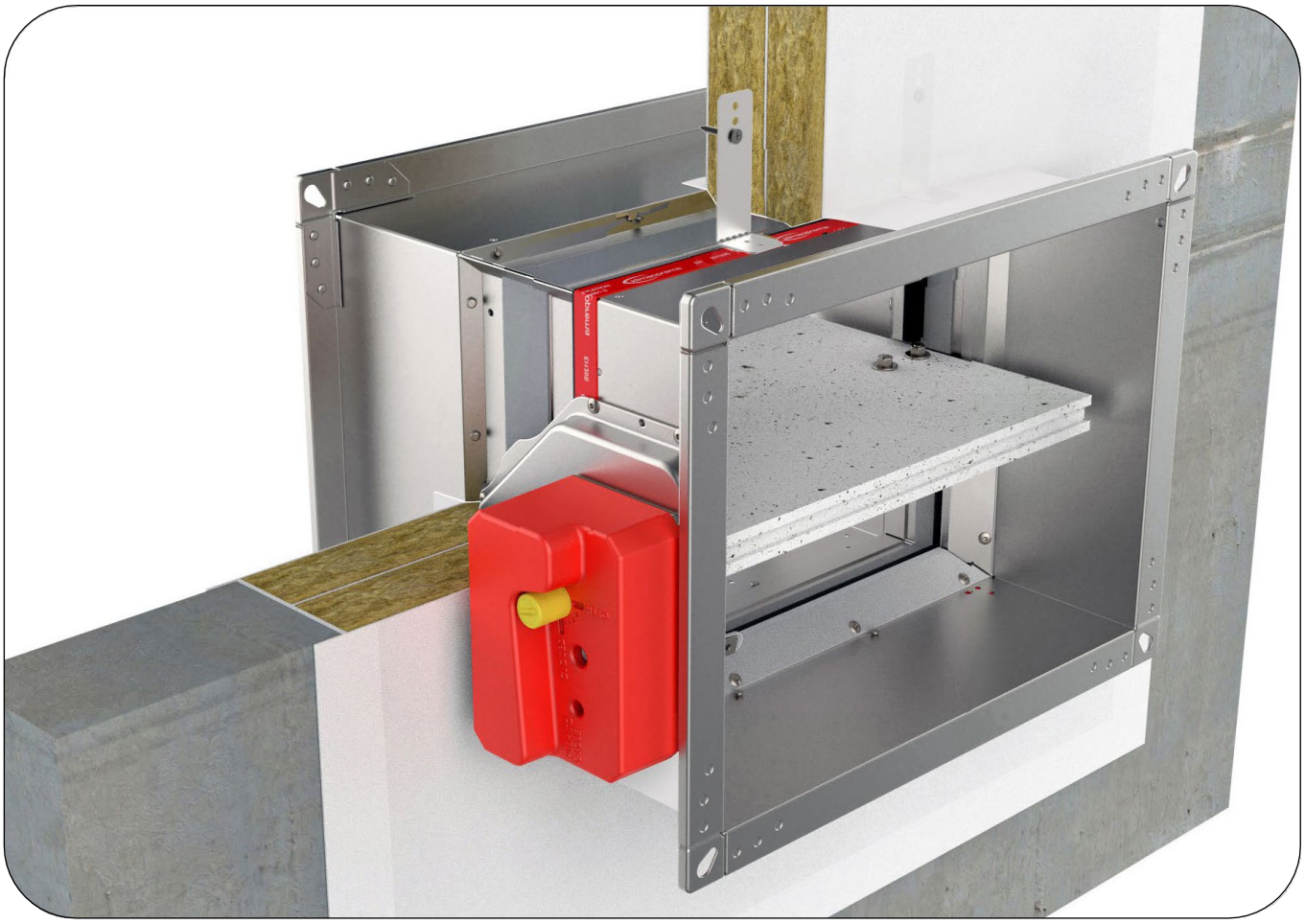

The wall is composed of concrete blocks (minimum density of 450 kg/m^3) or reinforced concrete (minimum density of 2200 kg/m^3) and with a minimum thickness of 100 mm.

Installation material: mineral wool (minimum density of 140 kg/m^3), fire protection coating.

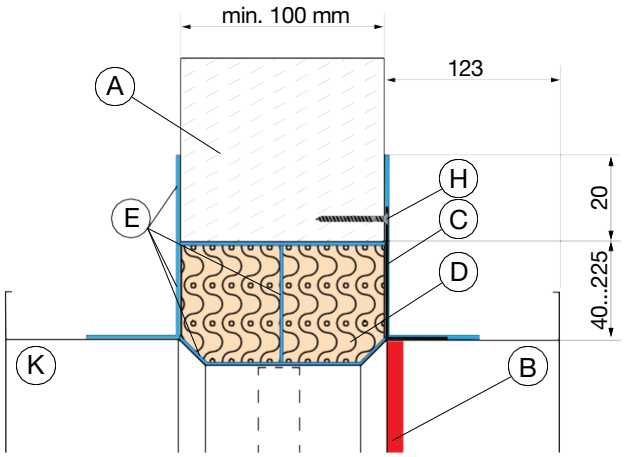

Rigid wall installation

A Rigid wall
B Limit mark
C Fixing bracket with screw hole Ød 6mm, min length 30 mm
D Sealing material, mineral wool, min. density 150 kg/m^3
E Intumescent fire resistant sealant
H Masonry screw 6x50mm (optional)
K Fire damper casing

Classification

FD25: EI 90 (ve i↔o)S
FD40: EI 90 (ve i↔o)S

* The images shown are for illustration purposes only and may not be an exact representation of the product.

Possible damper orientations

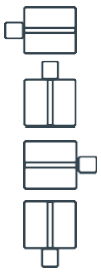

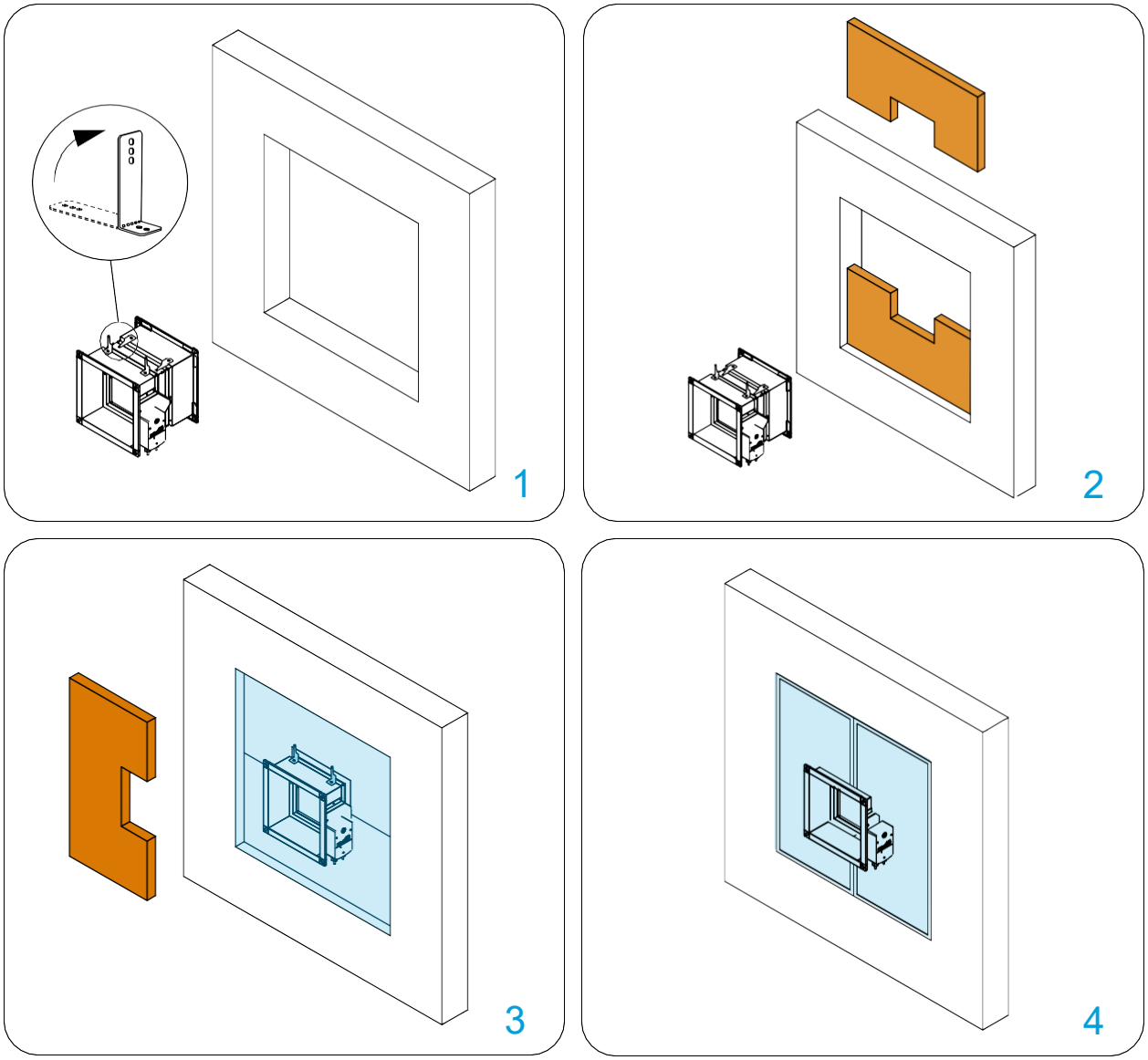

Damper blade must be closed during installation!

1. Recommended wall opening for fire damper installation is B(H) + 80…450 mm. Bend the fixing bracket 90° (bracket screw hole is 6 mm in diameter).

2. Close the gap between the housing and the wall with the first layer of mineral wool (50 mm thick, coated on the inside). Seal the joints between the pieces of mineral wool with intumescent, fire-resistant sealant.

3. Close the gap between the housing and the wall with the second layer of mineral wool (50 mm thick, coated on the inside). The joints between the mineral wool pieces must be sealed with intumescent, fire-resistant sealant.

4. The outside of the mineral wool and the damper housing must be coated with a 2 mm thick fire protection coating. The damper housing should be coated up to the profile projections.

*Multiple fire dampers can be installed next to each other or ceiling/wall with the minimal distance.

Test the operation of the damper blade!

* The images shown are for illustration purposes only and may not be an exact representation of the product.

Gypsum blocks wall installation (mortar sealing)

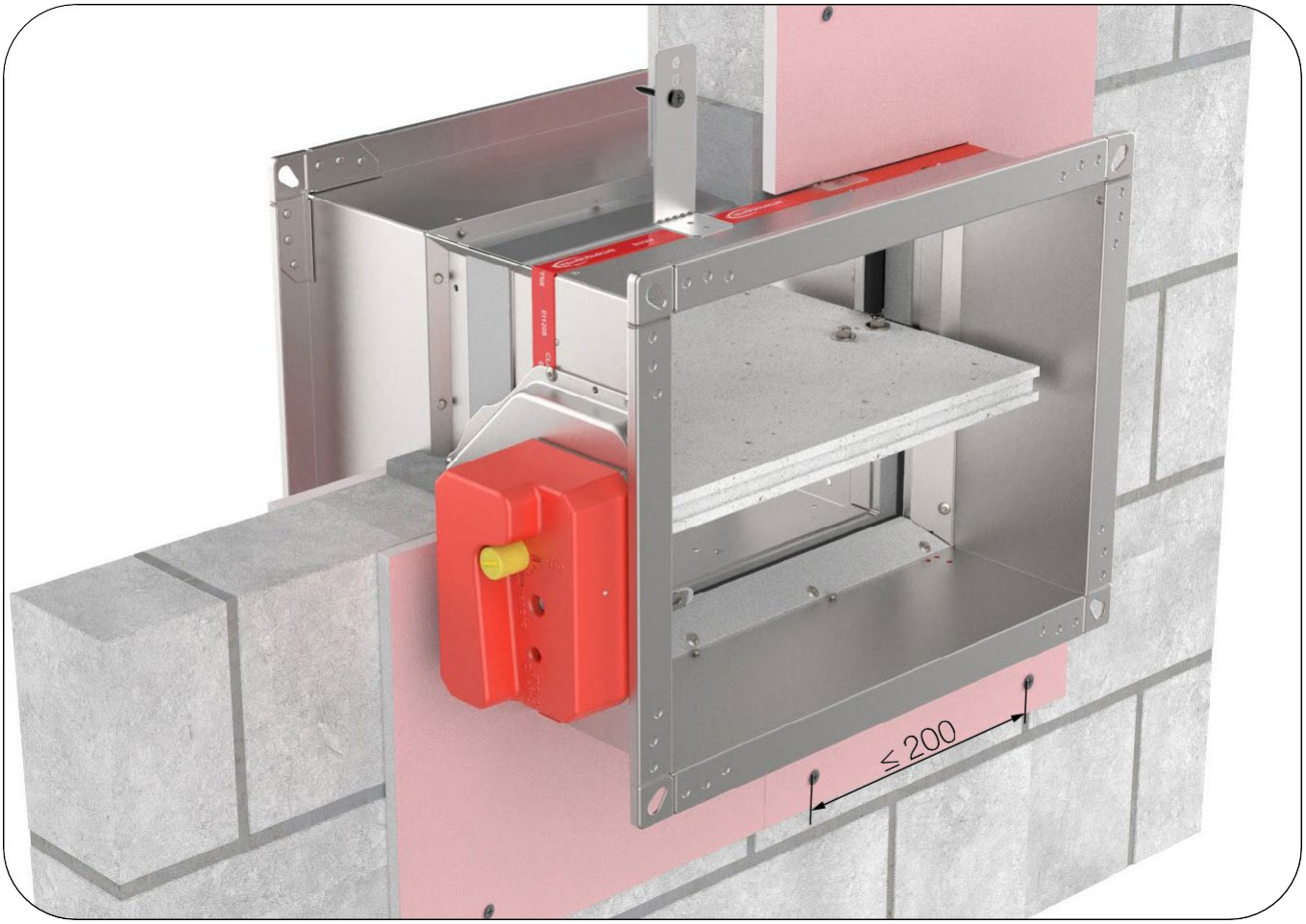

The wall is composed of gypsum blocks (minimum density of 995 kg/m^3) and with minimum thickness of 70 mm.
Installation material: gypsum plaster or mortar, covered with plasterboard cover boards.

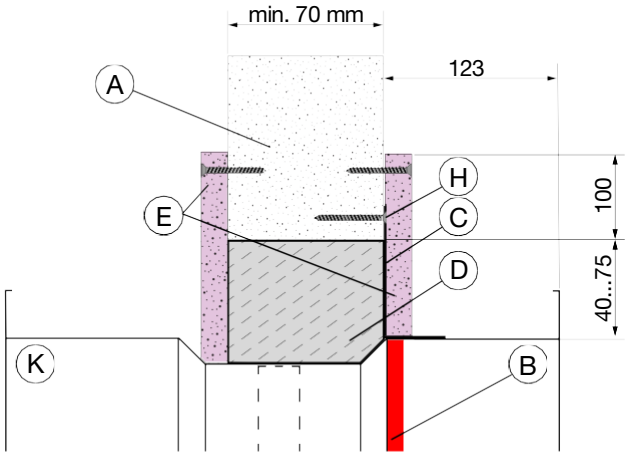

Gypsum blocks wall installation

A Gypsum wall
B Limit mark
C Fixing bracket with screw hole Ød 6 mm, min length 30 mm
D Gypsum plaster / Mortar sealing
E GKF cover boards with selftaping screws, 35 mm
H Masonry screw 6x50 mm (optional)
K Fire damper casing

Classification

FD25: EI 120 (ve i↔o)S
FD40: EI 120 (ve i↔o)S

* The images shown are for illustration purposes only and may not be an exact representation of the product.

Possible damper orientations

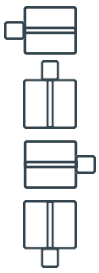

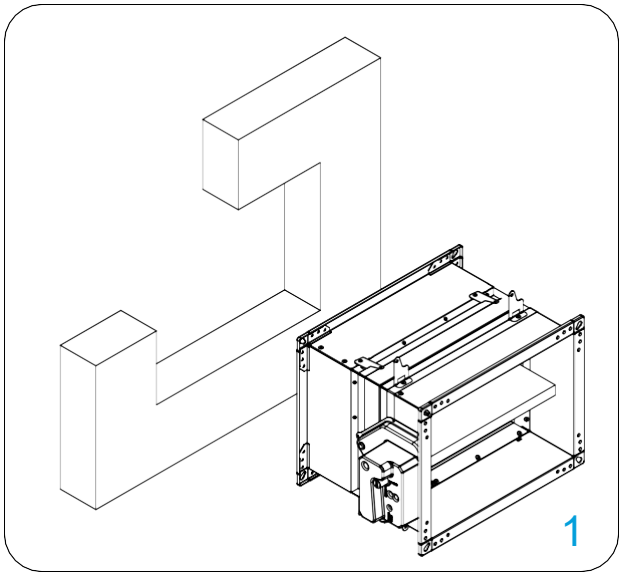

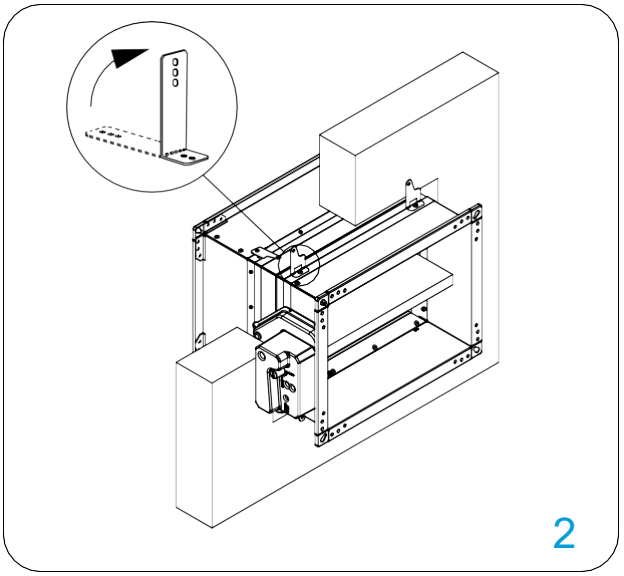

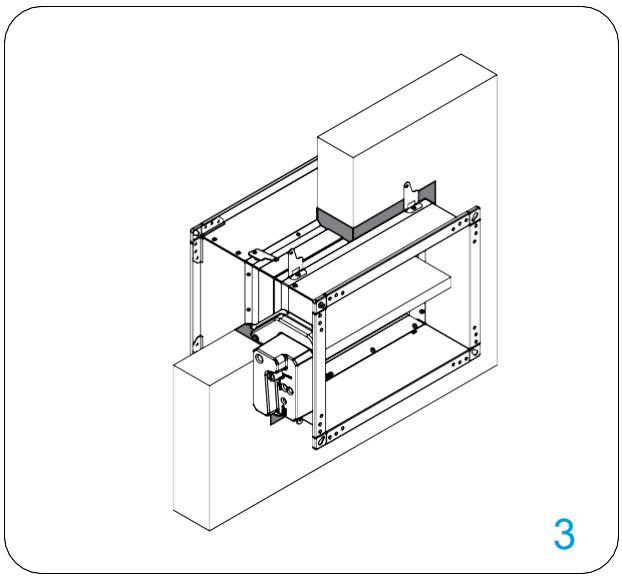

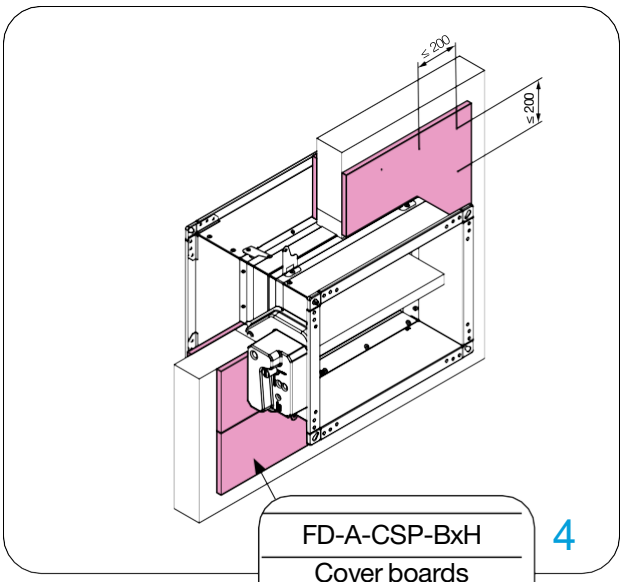

FD-A-CSP-BxH

Cover boards accessorie
see page.100

Damper blade must be closed during the installation!

1. Recommended wall opening for the fire damper installation is B (H) + 80...150 mm.

2. Bend the fixing bracket 90° and fix the fire damper to the wall with the screws.
(bracket screw hole is 6 mm in diameter).

3. Fill the space between casing and wall with mortar.

4. Cover the wool with 12.5 mm thick gypsum plasterboard or accessories cover boards FD-A-CSP-BxH.
Attach the plasterboard all around, using screws spaced <= 200 mm

*Build the support for mortar installation according to the drawing.
*Multiple fire dampers can be installed next to each other or ceiling/wall with the minimal distance.

Test the operation of the damper blade!

* The images shown are for illustration purposes only and may not be an exact representation of the product.

Flexible wall installation (mortar sealing)

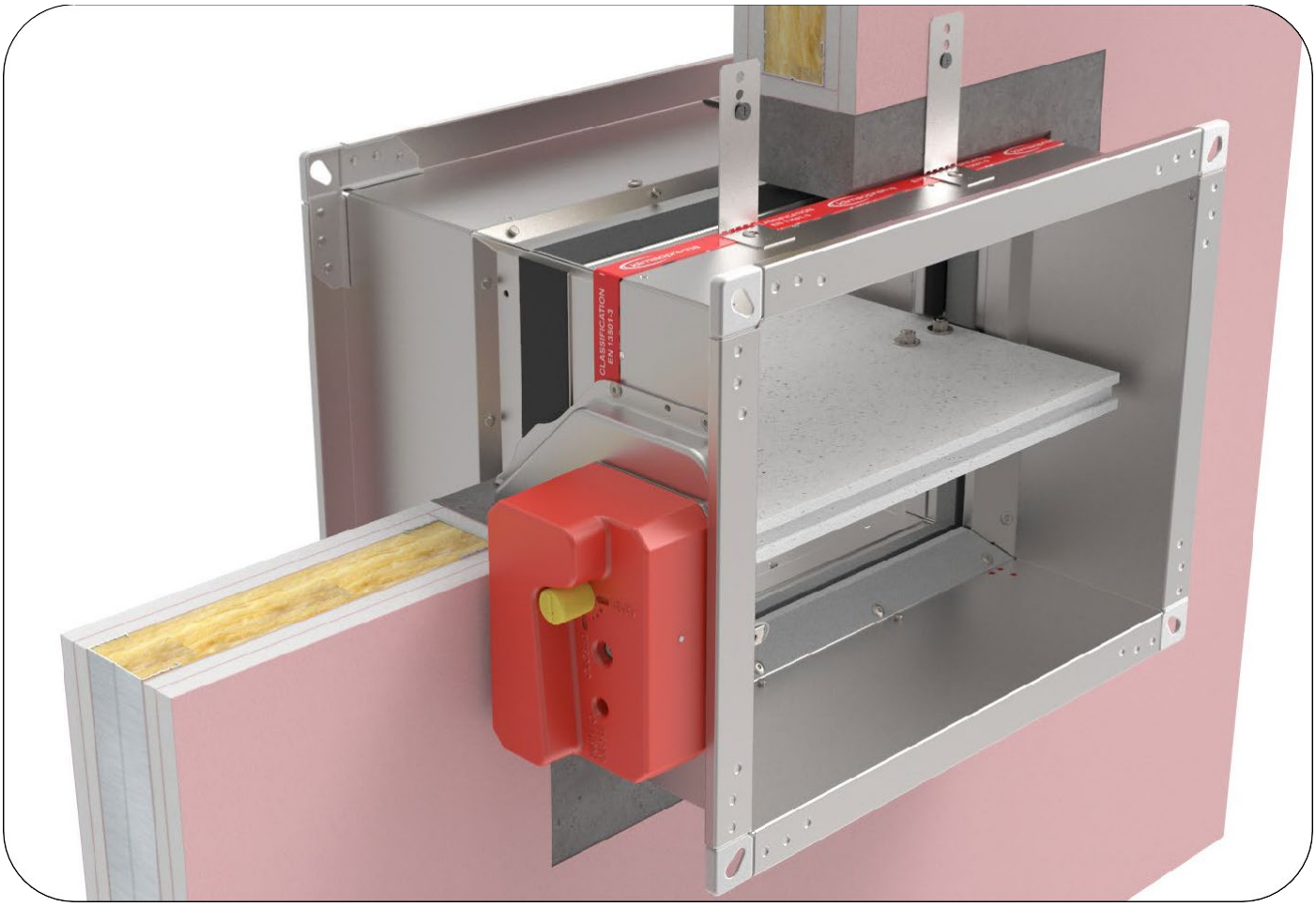

The wall is composed of 2x2 plasterboard boards, 12,5 mm thick, installed on a steel frame construction.
Installation material: gypsum plaster or mortar covered with type F (EI 120) or type A (EI 60) cover boards.
The minimum thickness of the wall is 100 mm.

FD25 EI 90 (ve i↔o)S

FD40 EI 120 (ve i↔o)S

The wall is made out of type F (EN520) gypsum plaster boards, mineral wool up to 115 kg/m^3.

FD40 EI 60 (ve i↔o)S

The wall is made out of type A (EN520) gypsum plaster boards, mineral wool up to 60 kg/m^3.

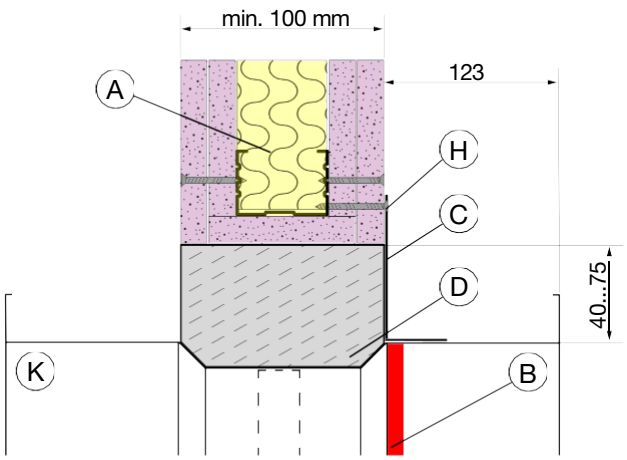

Flexible wall installation without cover boards

A Flexible wall
B Limit mark
C Fixing bracket with screw hole Ød 6 mm, min length 30 mm
D Gypsum plaster / Mortar sealing
H Drywall screws 6x50 mm (optional)
K Fire damper casing

Classification

FD25: EI 90 (ve i↔o)S, without cover boards
FD40 (type F wall): EI 120 (ve i↔o)S, without cover boards
FD40 (type A wall): EI 60 (ve i↔o)S, without cover boards

* The images shown are for illustration purposes only and may not be an exact representation of the product.

DOP WALLS MATERIALS

Possible damper orientations

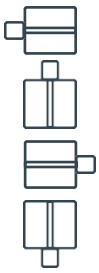

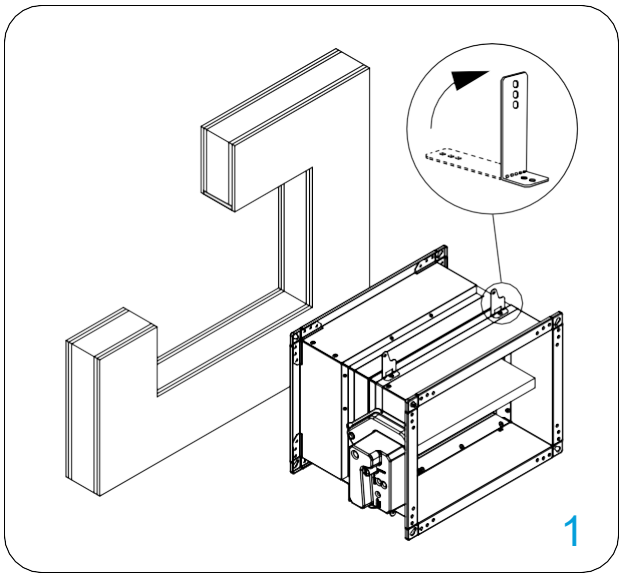

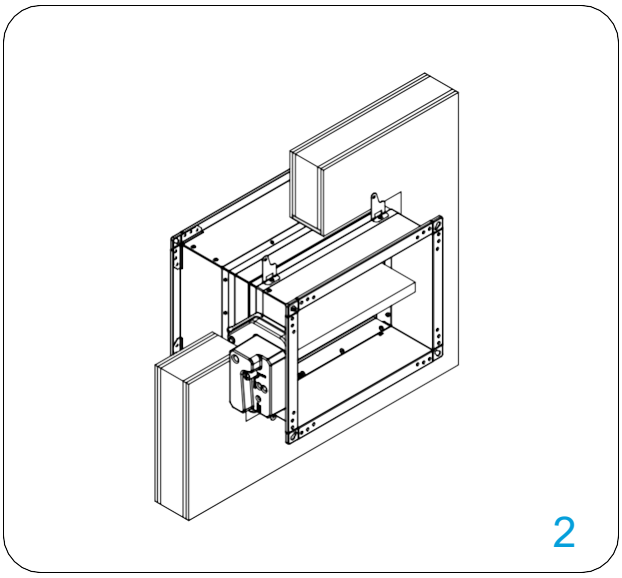

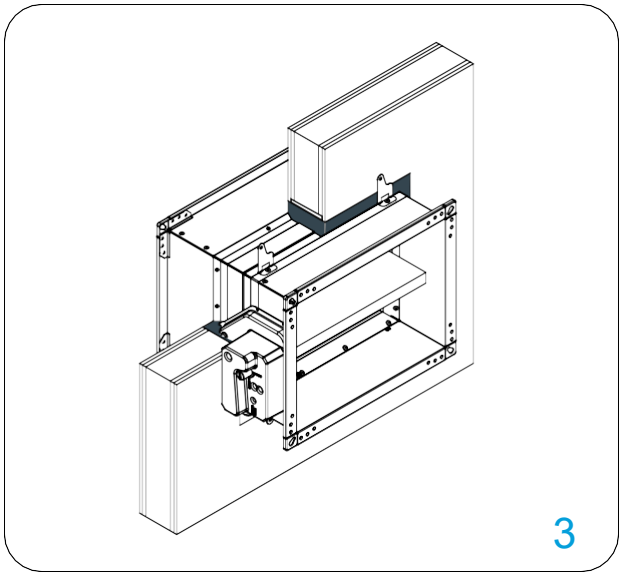

Damper blade must be closed during the installation!

1. Recommended wall opening for the fire damper installation is B (H) + 80...150 mm. Build the subframe according to the drawing. Bend the fixing bracket 90°. Place the damper in the opening up to the wall limit mark on the damper.

2. Fix the damper to the wall using self-tapping screws Ø3,5x45 mm (bracket screw hole is 6 mm in diameter).

3. Fill the space between the damper and the wall with mortar sealing.

*Build the support for mortar installation according to the drawing.
*Multiple fire dampers can be installed next to each other or ceiling/wall with the minimal distance.

Test the operation of the damper blade!

* The images shown are for illustration purposes only and may not be an exact representation of the product.

Flexible wall installation (mortar sealing)

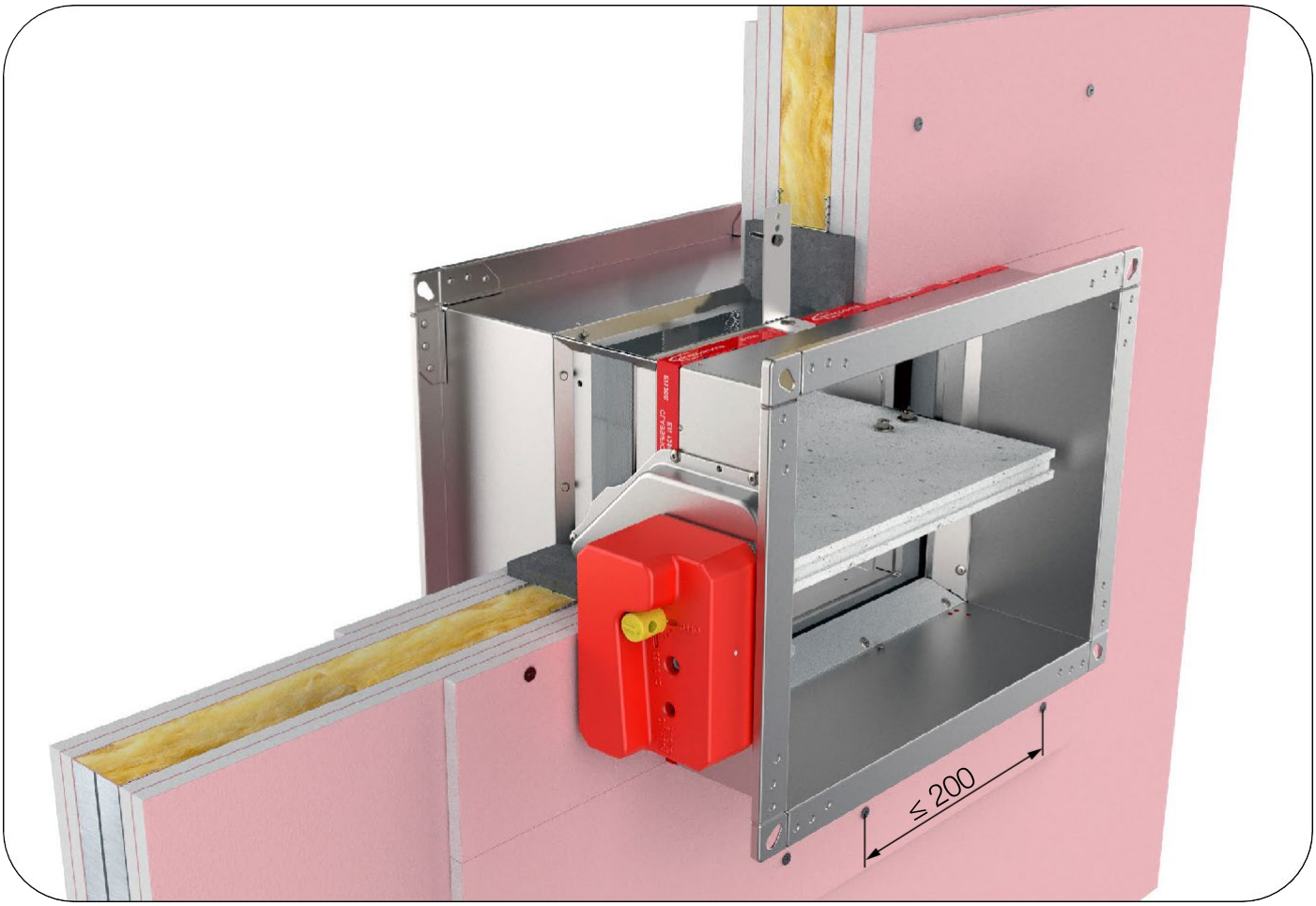

The wall is composed of 2x2 plasterboard boards, 12,5 mm thick, installed on a steel frame construction.
Installation material: gypsum plaster or mortar covered with type F (EI 120) or type A (EI 60) cover boards. The minimum thickness of the wall is 100 mm.

EI 120 (ve i↔o)S
The wall is made out of type F (EN520) gypsum plaster boards. To fulfill the classification it is NOT mandatory to use the mineral wool inside the wall with density up to 100 kg/m^3 can be used.

EI 60 (ve i↔o)S
The wall is made out of type A (EN520) gypsum plaster boards. To fulfill the classification it is NOT mandatory to use the mineral wool inside the wall with density up to 60 kg/m^3 can be used.

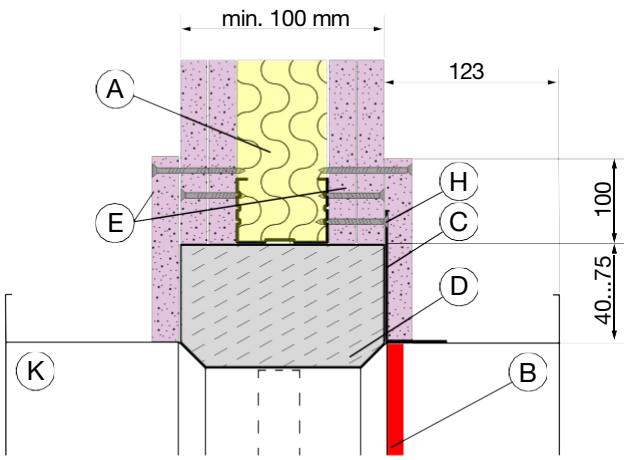

Flexible wall installation with cover boards

A Flexible wall
B Limit mark
C Fixing bracket with screw hole Ød 6 mm, min length 30 mm
D Gypsum plaster / Mortar sealing
E GKF cover boards with drywall screws, 45 mm
H Drywall screws 6x50 mm (optional)
K Fire damper casing

Classification

FD25 (type F wall) EI 120 (ve i↔o)S, with cover boards
FD40 (type F wall) EI 120 (ve i↔o)S, with cover boards
FD25 (type A wall) EI 60 (ve i↔o)S, with cover boards
FD40 (type A wall) EI 60 (ve i↔o)S, with cover boards

* The images shown are for illustration purposes only and may not be an exact representation of the product.

DOP WALLS MATERIALS

Possible damper orientations

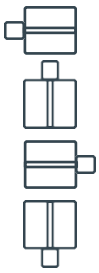

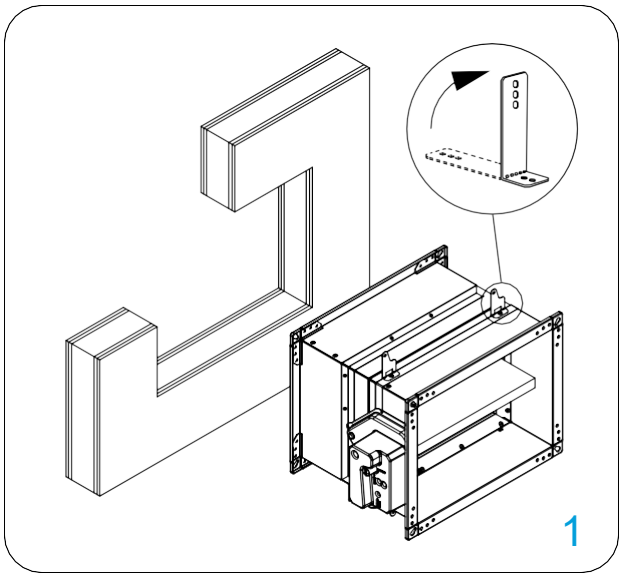

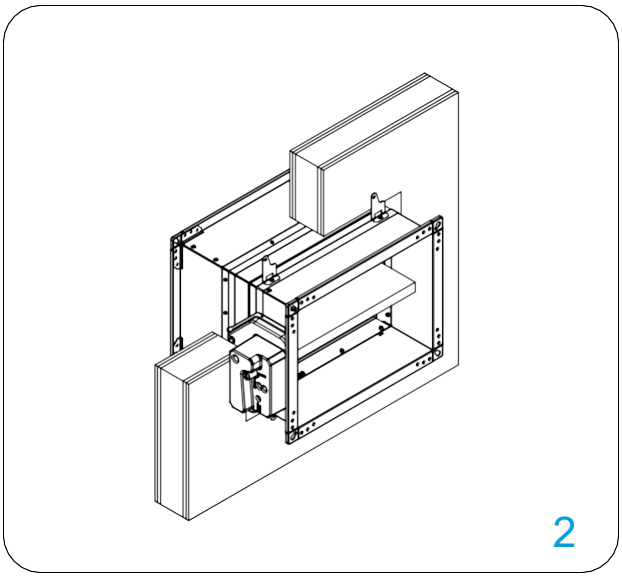

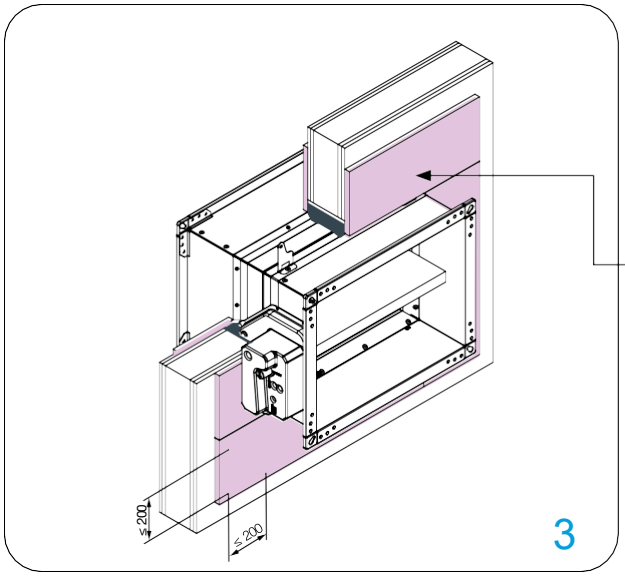

FD-A-CSP-BxH

Cover boards accessorie

see page.100

Damper blade must be closed during the installation!

1. Recommended wall opening for the fire damper installation is B (H) + 80...150 mm. . Build the subframe according to the drawing. Bend the fixing bracket 90°. Place the damper in the opening up to the wall limit mark on the damper.

2. Fix the damper to the wall using self-tapping screws Ø3,5x45 mm (bracket screw hole is 6 mm in diameter).

3. Fill the space between the damper and the wall with mortar sealing. Cover the mortar with GKF gypsum boards (12,5 mm thick, FD-A-CSP-BxH). Attach the plasterboard all around, using screws spaced <= 200 mm

*Build the support for mortar installation according to the drawing.

Test the operation of the damper blade!

* The images shown are for illustration purposes only and may not be an exact representation of the product.

Flexible wall installation (mineral wool sealing)

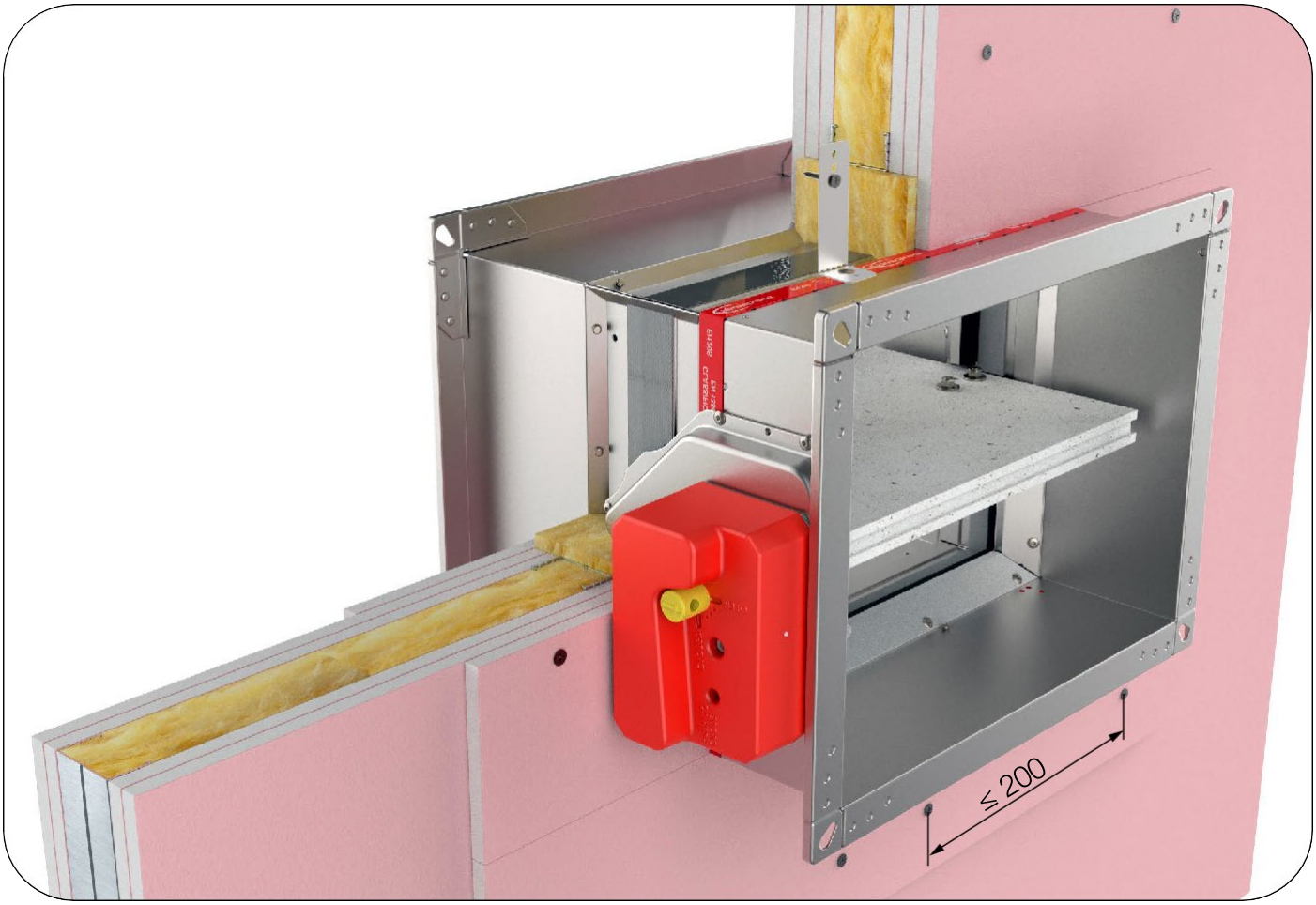

The wall is composed of 2x2 plasterboard boards, 12,5 mm thick, installed on a steel frame construction. Installation material: mineral wool (minimum density of 100 kg/m^3) covered with type F (EI 90) or type A (EI 60) cover boards. The minimum thickness of the wall is 100 mm.

EI 90 (ve i↔o)S

The wall is made out of type F (EN520) gypsum plaster boards. To fulfill the classification it is NOT mandatory to use the mineral wool inside the wall with density up to 100 kg/m^3 can be used.

EI 60 (ve i↔o)S

The wall is made out of type A (EN520) gypsum plaster boards. To fulfill the classification it is NOT mandatory to use the mineral wool inside the wall with density up to 60 kg/m^3 can be used.

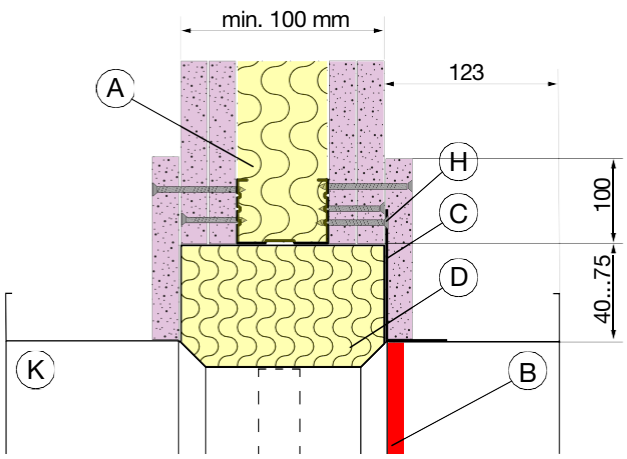

Flexible wall installation

A Flexible wall
B Limit mark
C Fixing bracket with screw hole Ød 6mm, min length 30 mm
D Sealing material, mineral wool, 100 kg/m^3 min.
E GKF cover boards with drywall screws 35 and 45mm
H Drywall screws 6x50 mm (optional)
K Fire damper casing

Classification

FD25 (type F wall): EI 90 (ve i↔o)S
FD40 (type F wall): EI 90 (ve i↔o)S
FD25 (type A wall): EI 60 (ve i↔o)S
FD40 (type A wall): EI 60 (ve i↔o)S

* The images shown are for illustration purposes only and may not be an exact representation of the product.

Possible damper orientations

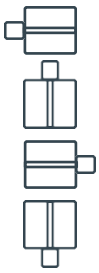

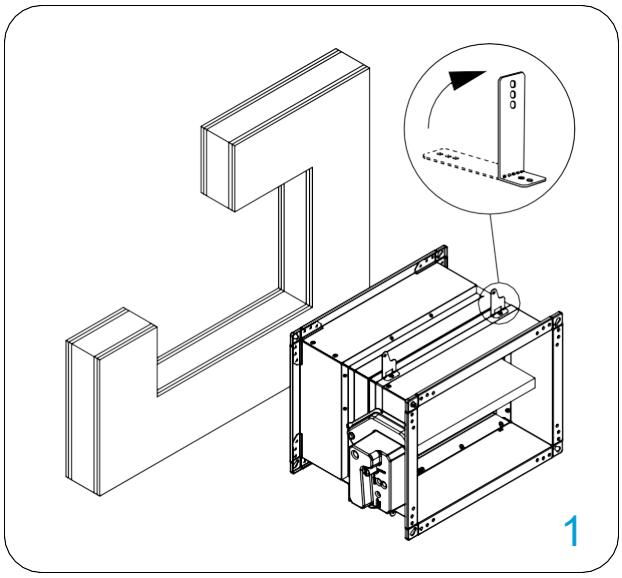

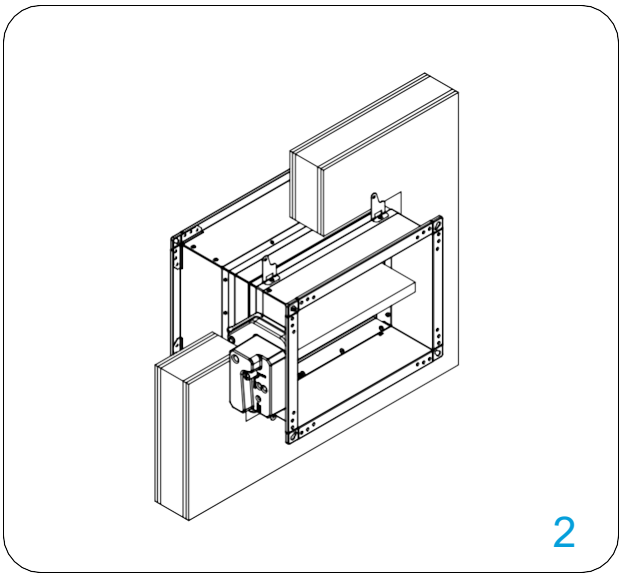

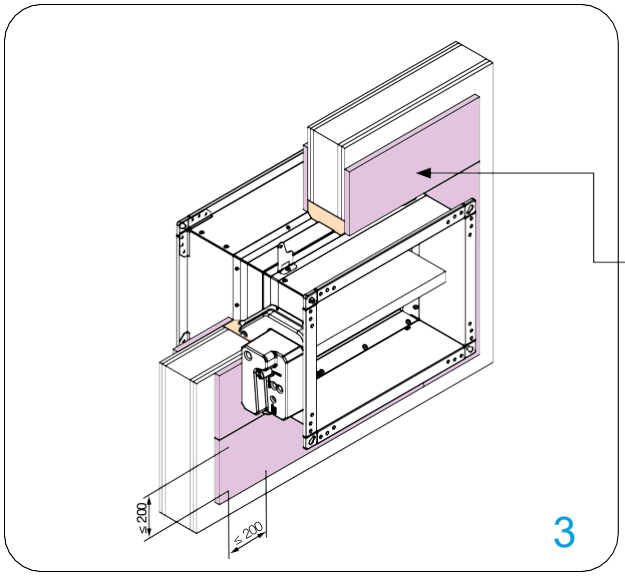

FD-A-CSP-BxH

Cover boards accessorie

see page.100

Damper blade must be closed during the installation!

1. Recommended wall opening for the fire damper installation is B (H) + 80...150 mm. . Build the subframe according to the drawing. Bend the fixing bracket 90°. Place the damper in the opening up to the wall limit mark on the damper.

2. Fix the damper to the wall using self-tapping screws Ø3,5x45 mm (bracket screw hole is 6 mm in diameter).

3. Fill the space between the damper and the wall with mineral wool. Cover the mineral wool with GKF gypsum boards (12,5 mm thick) and fix them with self-tapping screws Ø3,5x45 mm. Attach the plasterboard all around, using screws spaced <= 200 mm

*Multiple fire dampers can be installed next to each other or ceiling/wall with the minimal distance.

Test the operation of the damper blade!

* The images shown are for illustration purposes only and may not be an exact representation of the product.

Flexible wall installation (Fire Batt/Weichschott)

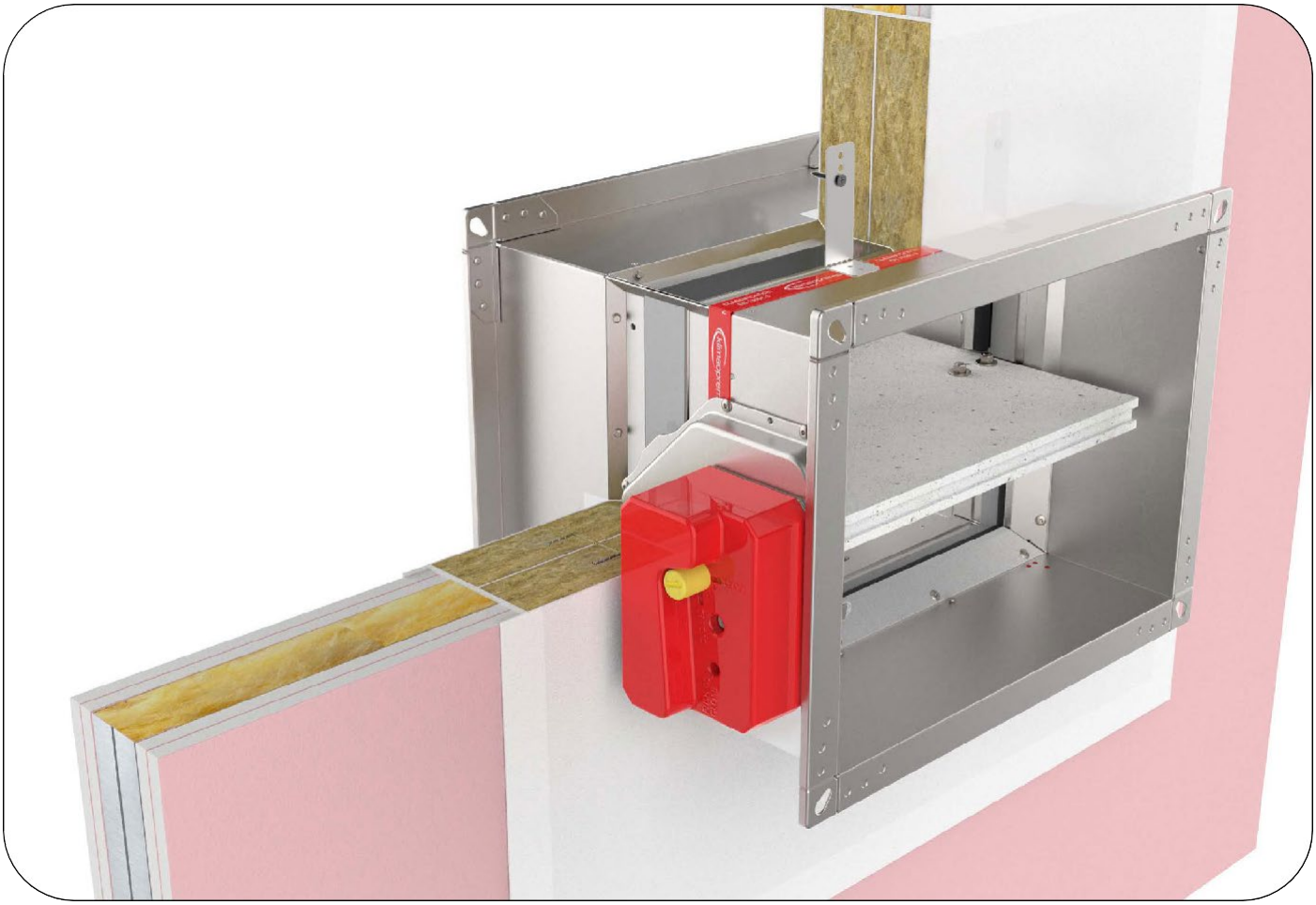

The wall is composed of 2x2 plasterboard boards, 12,5 mm thick, installed on a steel frame construction.
Installation material: mineral wool (minimum density of 140 kg/m^3) and fire protection coating. The minimum thickness of the wall is 100 mm.

EI 90 (ve i↔o)S
The wall is made out of type F (EN520) gypsum plaster boards. To fulfill the classification it is NOT mandatory to use the mineral wool inside the wall with density up to 100 kg/m^3 can be used.

EI 60 (ve i↔o)S
The wall is made out of type A (EN520) gypsum plaster boards. To fulfill the classification it is NOT mandatory to use the mineral wool inside the wall with density up to 60 kg/m^3 can be used.

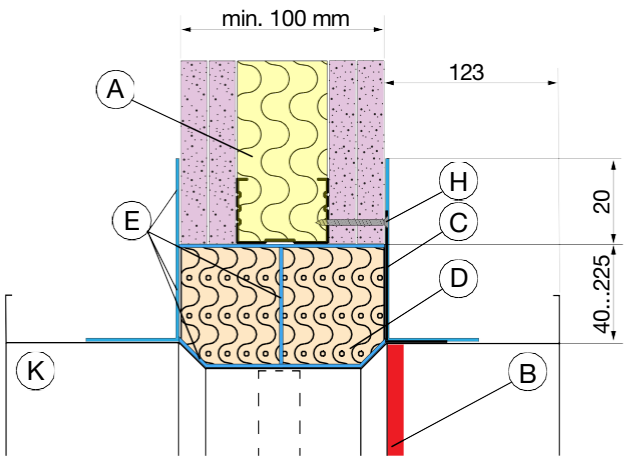

Flexible wall installation

A Flexible wall
B Limit mark
C Fixing bracket with screw hole Ød 6mm, min length 30 mm
D Sealing material, mineral wool, min. density 150 kg/m^3
E Intumescent fire resistant sealant
H Drywall screws 6x50 mm (optional)
K Fire damper casing

Classification

FD25 (type F wall): EI 90 (ve i↔o)S
FD40 (type F wall): EI 90 (ve i↔o)S
FD25 (type A wall): EI 60 (ve i↔o)S
FD40 (type A wall): EI 60 (ve i↔o)S

* The images shown are for illustration purposes only and may not be an exact representation of the product.

Possible damper orientations

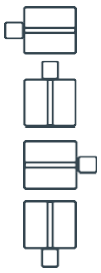

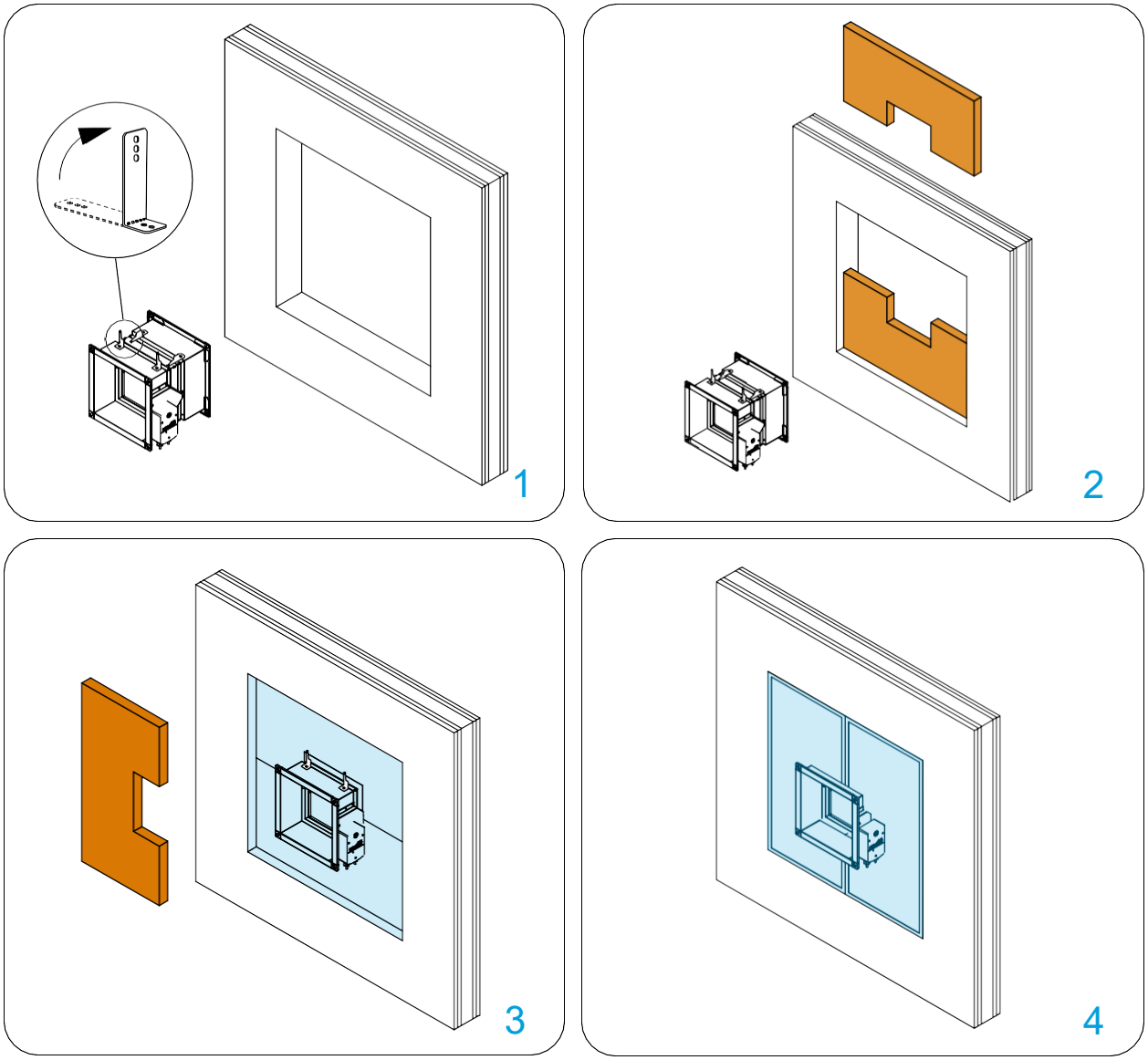

Damper blade must be closed during installation!

1. Recommended wall opening for fire damper installation is B(H) + 80…450 mm. Bend the fixing bracket 90° (bracket screw hole is 6 mm in diameter). Build the subframe according to the drawing.

2. Close the gap between the housing and the wall with the first layer of mineral wool (50 mm thick, coated on the inside). Seal the joints between the pieces of mineral wool with intumescent, fire-resistant sealant.

3. Close the gap between the housing and the wall with the second layer of mineral wool (50 mm thick, coated on the inside). The joints between the mineral wool pieces must be sealed with intumescent, fire-resistant sealant.

4. The outside of the mineral wool and the damper housing must be coated with a 2 mm thick fire protection coating. The damper housing should be coated up to the profile projections.

*Multiple fire dampers can be installed next to each other or ceiling/wall with the minimal distance.

Test the operation of the damper blade!

* The images shown are for illustration purposes only and may not be an exact representation of the product.

Flexible wall installation -75mm (Fire Batt/Weichschott)

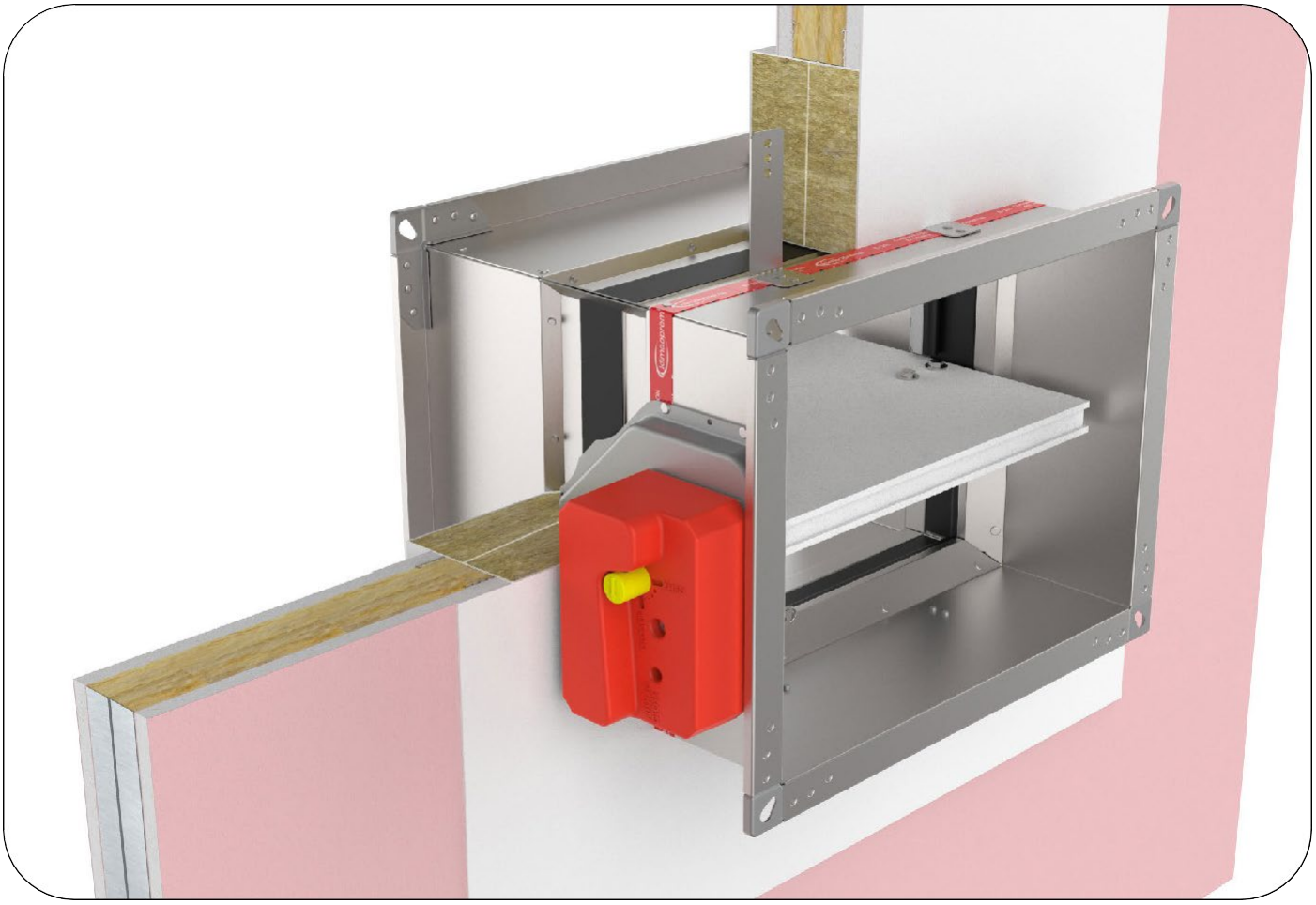

The wall is composed of 1x1plasterboard boards, 12,5 mm thick, installed on a steel frame construction.
Installation material: mineral wool (minimum density of 140 kg/m^3) and fire protection coating. The minimum thickness of the wall is 75 mm.

EI 45(ve i↔o)S
The wall is made out of type F (EN520) gypsum plaster boards. To fulfill the classification it is NOT mandatory to use the mineral wool inside the wall with density up to 115 kg/m^3 can be used.

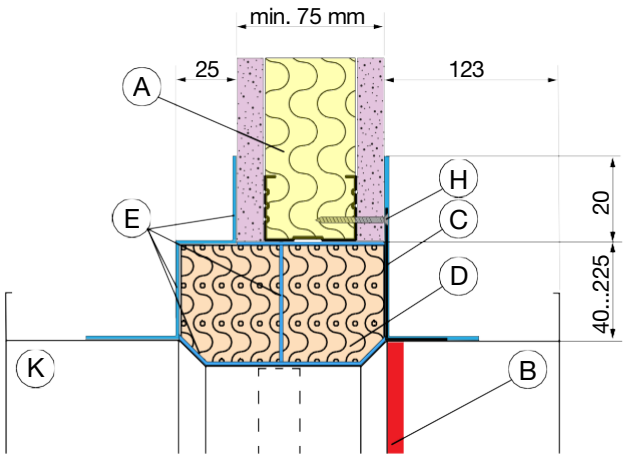

Flexible wall installation

A Flexible wall
B Limit mark
C Fixing bracket with screw hole Ød 6mm, min length 30 mm
D Sealing material, mineral wool, min. density 150 kg/m^3
E Intumescent fire resistant sealant
H Drywall screws 6x50 mm (optional)
K Fire damper casing

Classification

FD25: EI 45 (ve i↔o)S
FD40: EI 45 (ve i↔o)S

* The images shown are for illustration purposes only and may not be an exact representation of the product.

Possible damper orientations

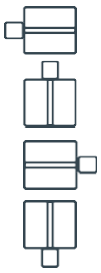

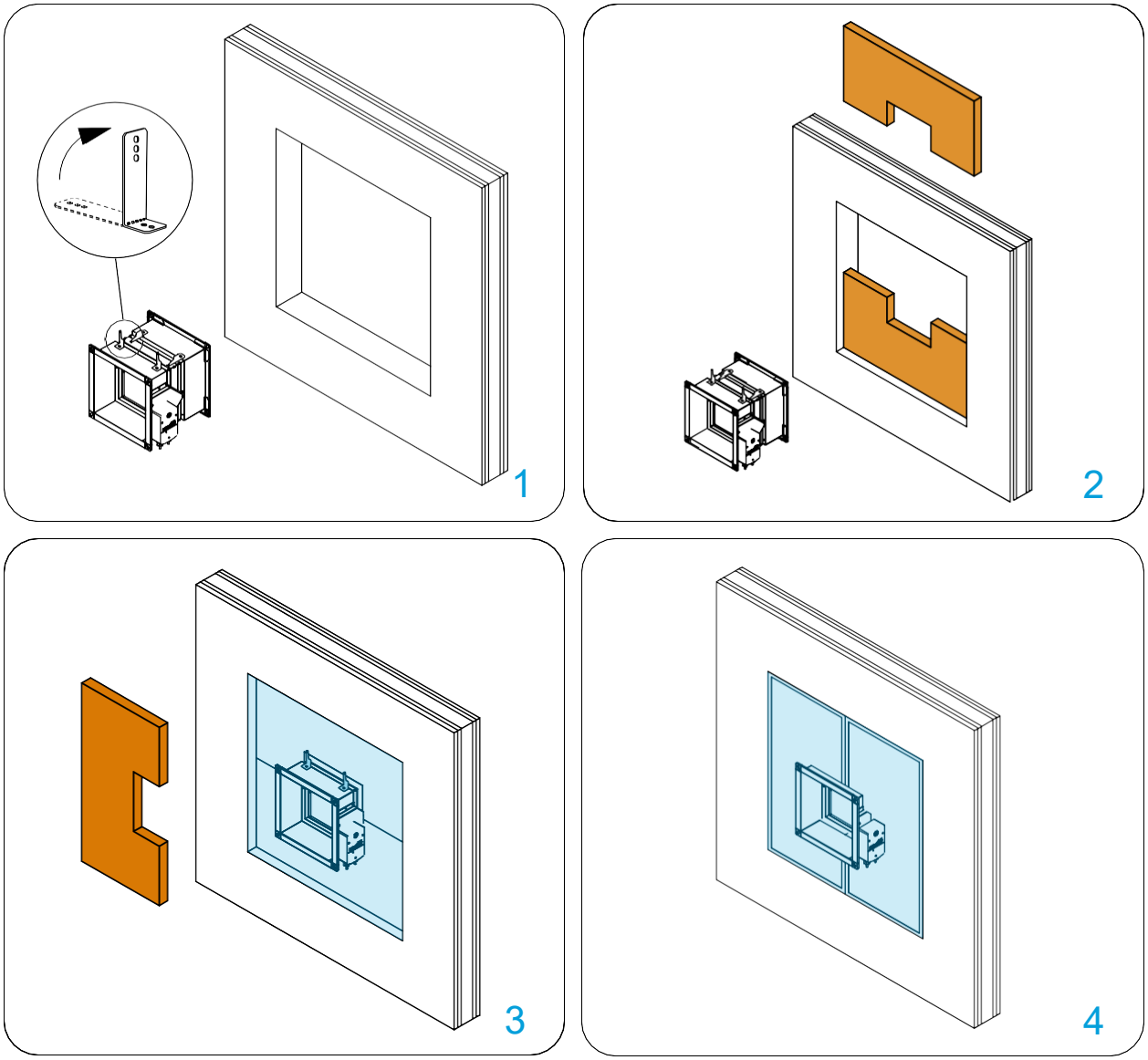

Damper blade must be closed during installation!

1. Recommended wall opening for fire damper installation is B(H) + 80…450 mm. Bend the fixing bracket 90° (bracket screw hole is 6 mm in diameter). Build the subframe according to the drawing.

2. Close the gap between the housing and the wall with the first layer of mineral wool (50 mm thick, coated on the inside). Seal the joints between the pieces of mineral wool with intumescent, fire-resistant sealant.

3. Close the gap between the housing and the wall with the second layer of mineral wool (50 mm thick, coated on the inside). The joints between the mineral wool pieces must be sealed with intumescent, fire-resistant sealant.

4. The outside of the mineral wool and the damper housing must be coated with a 2 mm thick fire protection coating. The damper housing should be coated up to the profile projections.

*Multiple fire dampers can be installed next to each other or ceiling/wall with the minimal distance.

Test the operation of the damper blade!

* The images shown are for illustration purposes only and may not be an exact representation of the product.

Solid wood wall installation CLT wall (Fire Batt/Weichschott)

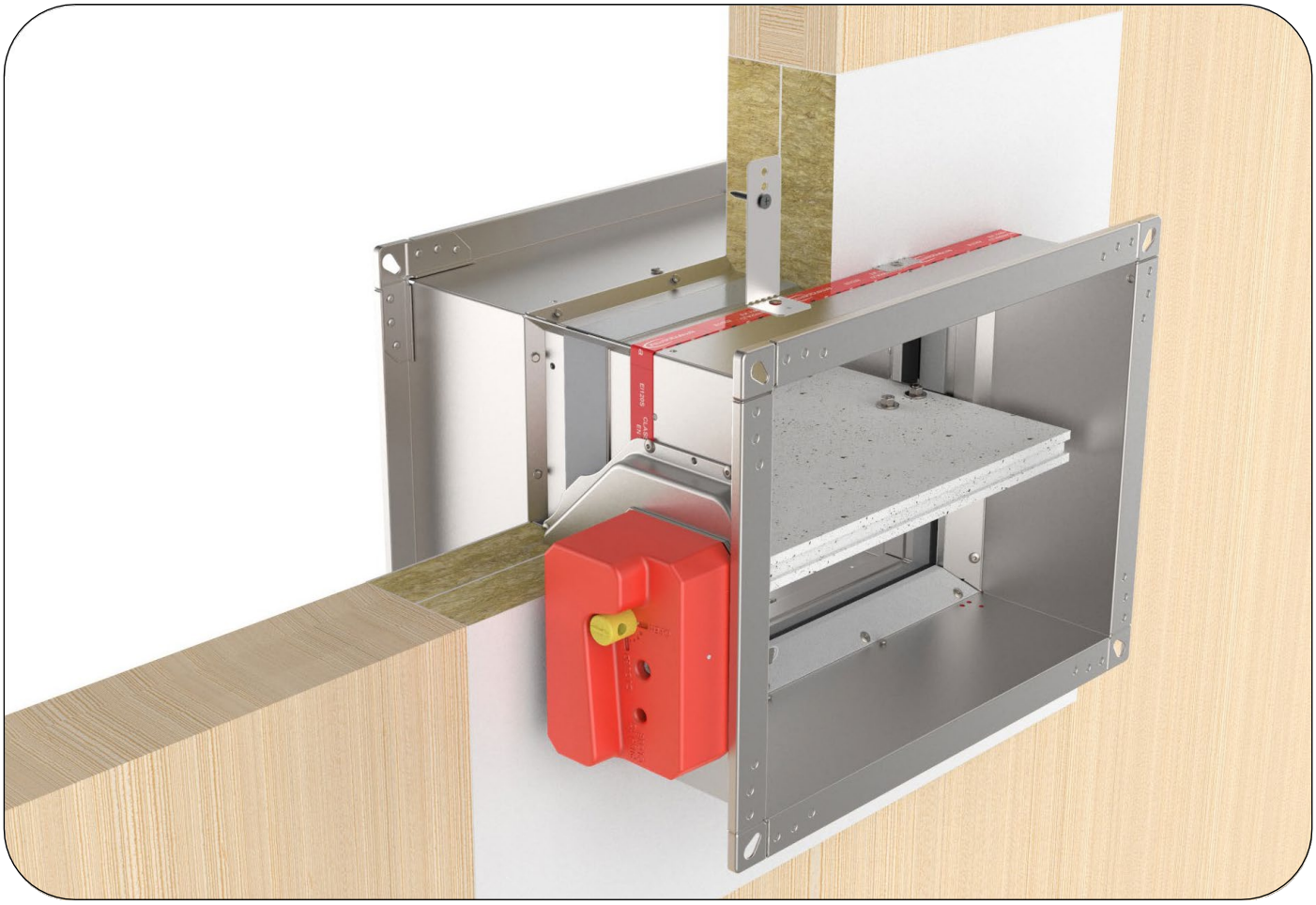

Fire dampers are mounted in CLT (Cross laminated timber) wooden wall with density 480 kg/m³.
Wall is made of 3 layers (30 – 40 – 30 mm).

EI 90 (ve i↔o)S
Installation material: Mineral wool (minimum density of 140 kg/m³, fire protection coating.

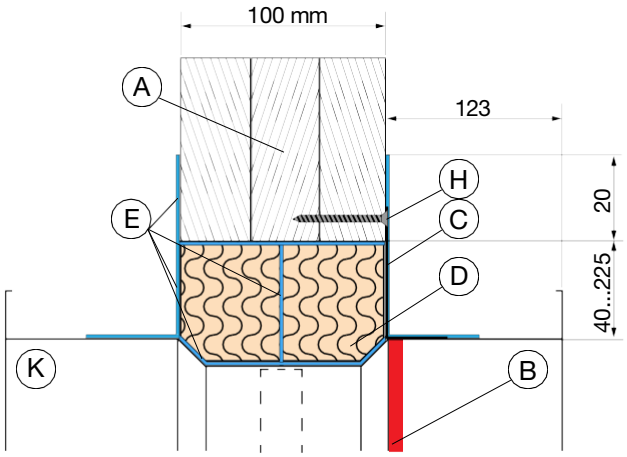

Solid wall installation CLT

A Solid wall
B Limit mark
C Fixing bracket with screw hole Ød 6mm, min length 30 mm
D Sealing material, mineral wool, min. density 150 kg/m³
E Intumescent fire resistant sealant
H Wood screws 6x50 mm (optional)
K Fire damper casing

Classification

FD25: EI 90 (ve i↔o)S
FD40: EI 90 (ve i↔o)S

* The images shown are for illustration purposes only and may not be an exact representation of the product.

Possible damper orientations

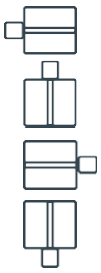

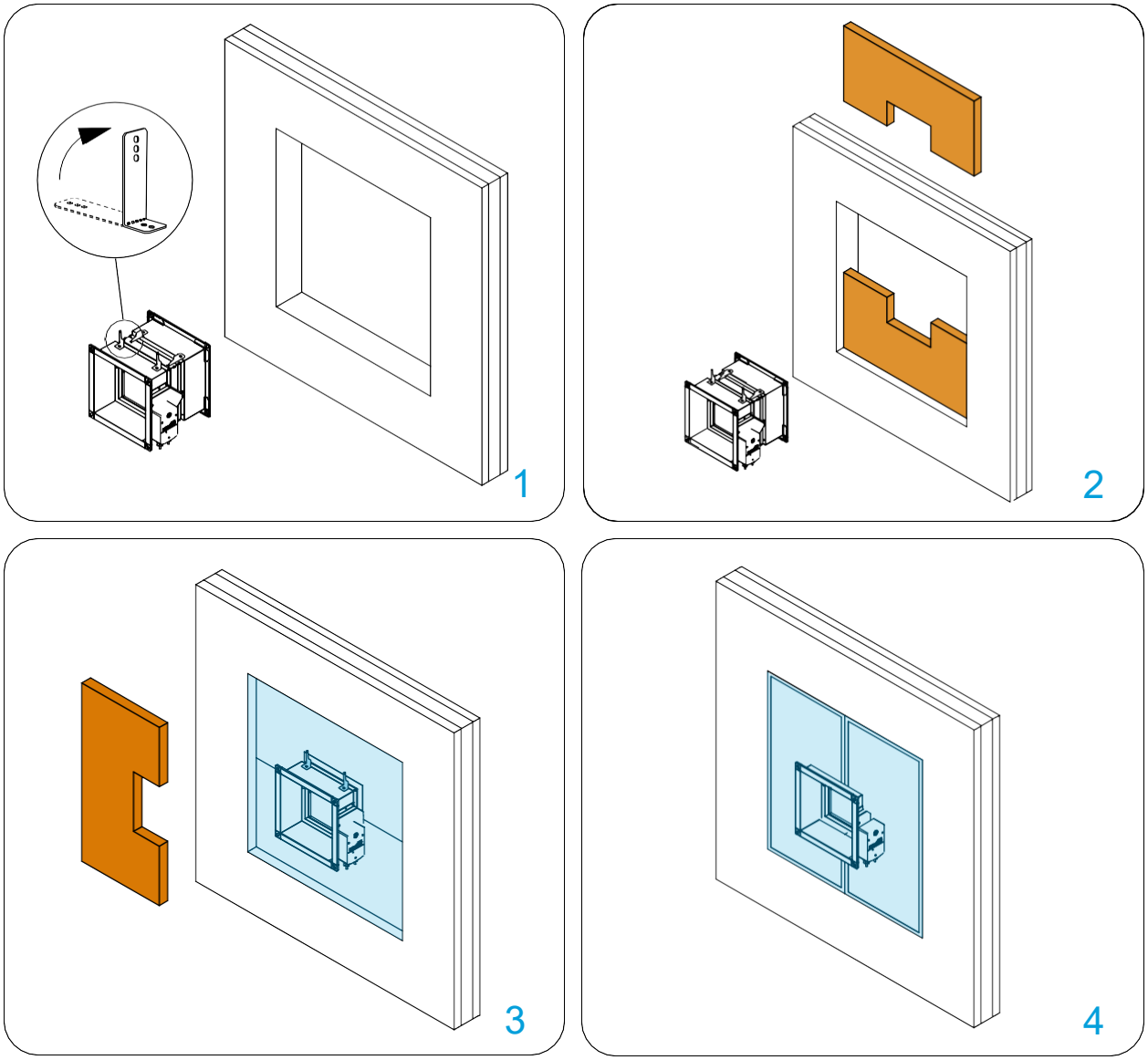

Damper blade must be closed during installation!

1. Recommended wall opening for fire damper installation is B(H) + 80…450 mm. Bend the fixing bracket 90° (bracket screw hole is 6 mm in diameter).

2. Close the gap between the housing and the wall with the first layer of mineral wool (50 mm thick, coated on the inside). Seal the joints between the pieces of mineral wool with intumescent, fire-resistant sealant.

3. Close the gap between the housing and the wall with the second layer of mineral wool (50 mm thick, coated on the inside). The joints between the mineral wool pieces must be sealed with intumescent, fire-resistant sealant.

4. The outside of the mineral wool and the damper housing must be coated with a 2 mm thick fire protection coating. The damper housing should be coated up to the profile projections.

*Multiple fire dampers can be installed next to each other or ceiling/wall with the minimal distance.

Test the operation of the damper blade!

* The images shown are for illustration purposes only and may not be an exact representation of the product.

Flexible wall installation (Eurobond)

The wall is composed of Eurobond Firemaster boards, in 100 mm thicknes, installed in a steel frame construction.

FD 25 EI 60 (i↔o)S
FD 40 EI 60 (i↔o)S
Sealing between dampers and wall is 2 layers of Rockwool Firepro 50 mm tick sealed with intumescent fire resistant sealant.

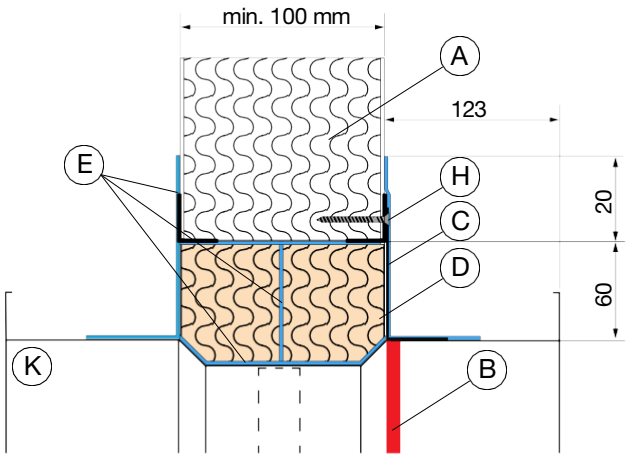

Flexible wall installation Eurobond

A Flexible wall
B Limit mark
C Fixing bracket with screw hole Ød 6mm, min length 30 mm
D Sealing material, mineral wool, min. density 150 kg/m³
E Intumescent fire resistant sealant
H Drywall screws 6x50 mm (optional)
K Fire damper casing

Classification

FD25: EI 60 (ve i↔o)S
FD40: EI 60 (ve i↔o)S

* The images shown are for illustration purposes only and may not be an exact representation of the product.

Possible damper orientations

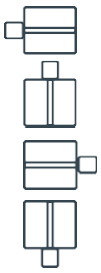

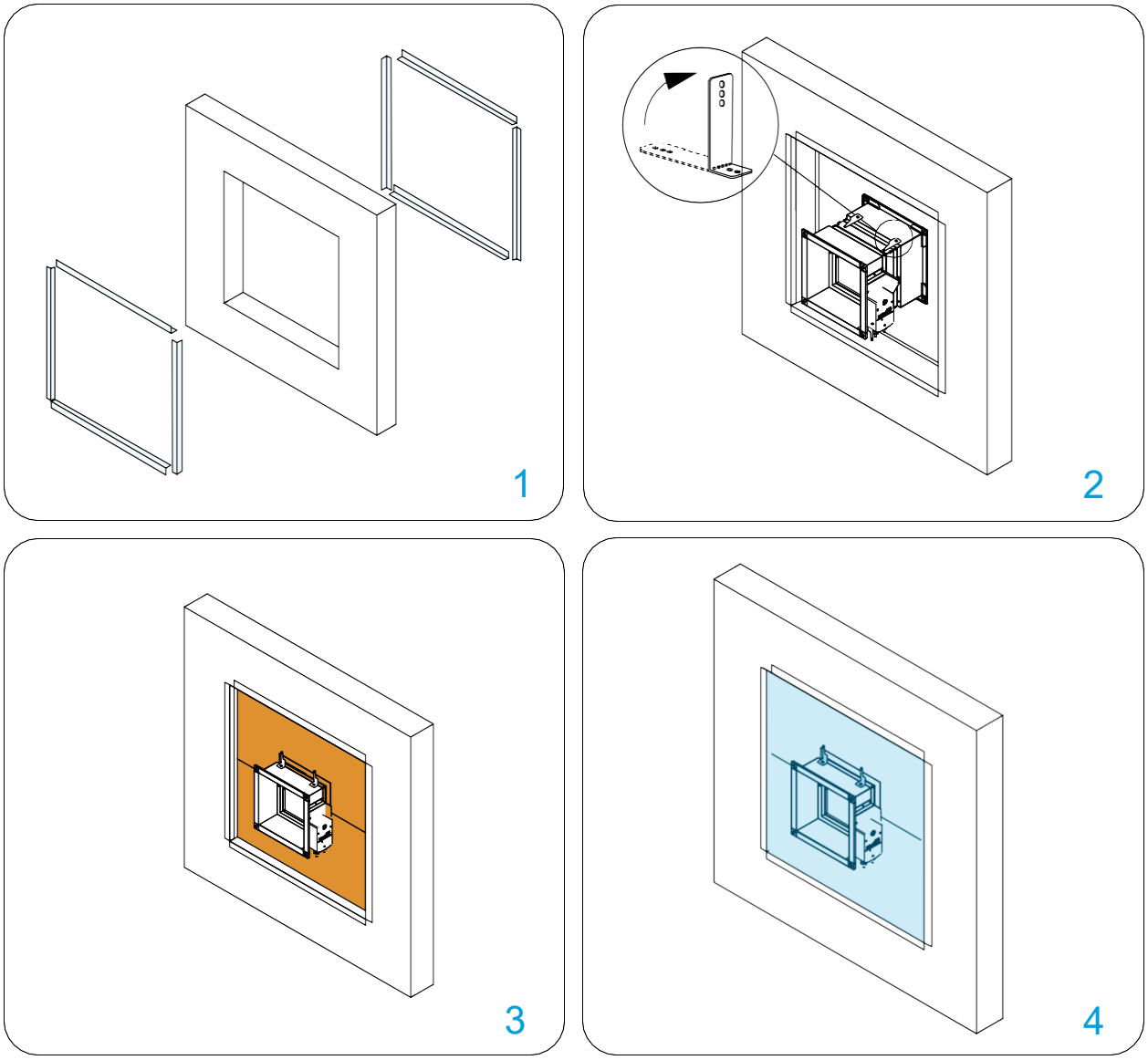

Damper blade must be closed during installation!

Create the wall.

1. Create an opening in the wall (B + 80 mm x H + 80 mm) on the connection of two boards.
The opening is re-inforced with L profiles 30x30x2mm and screws 6,3x25 on one sides and 6,3x120mm on other side.The opening must be coated with 2 mm thick fire protection coating.

2. Bend the mounting bracket by 90°. Insert the damper into the opening up to the limit mark on the damper.

3. Close the gap between the housing and the wall with the first layer of mineral wool (50 mm thick, coated on the inside).Seal the joints between the pieces of mineral wool with intumescent, fire-resistant sealant.Close the gap between thehousing and the wall with the second layer of mineral wool (50 mm thick, coated on the inside). The joints between themineral wool pieces must be sealed with intumescent, fire-resistant sealant.

4. The outside of the mineral wool and the damper housing must be coated with a 2 mm thick fire protection coating. Thedamper housing should be coated up to the profile projections.

Test the operation of the damper blade!

* The images shown are for illustration purposes only and may not be an exact representation of the product.

Flexible wall installation (Eurobond Battery 2x2)

The wall is composed of Eurobond Firemaster wall panels, in 100 mm thicknes, stalled in a steel frame construction.
FD 40 EI 90 (i↔o)S
Sealing between dampers and wall is 2 layers of Rockwool Firepro 50 mm tick sealed with intumescent fire resistant sealant.

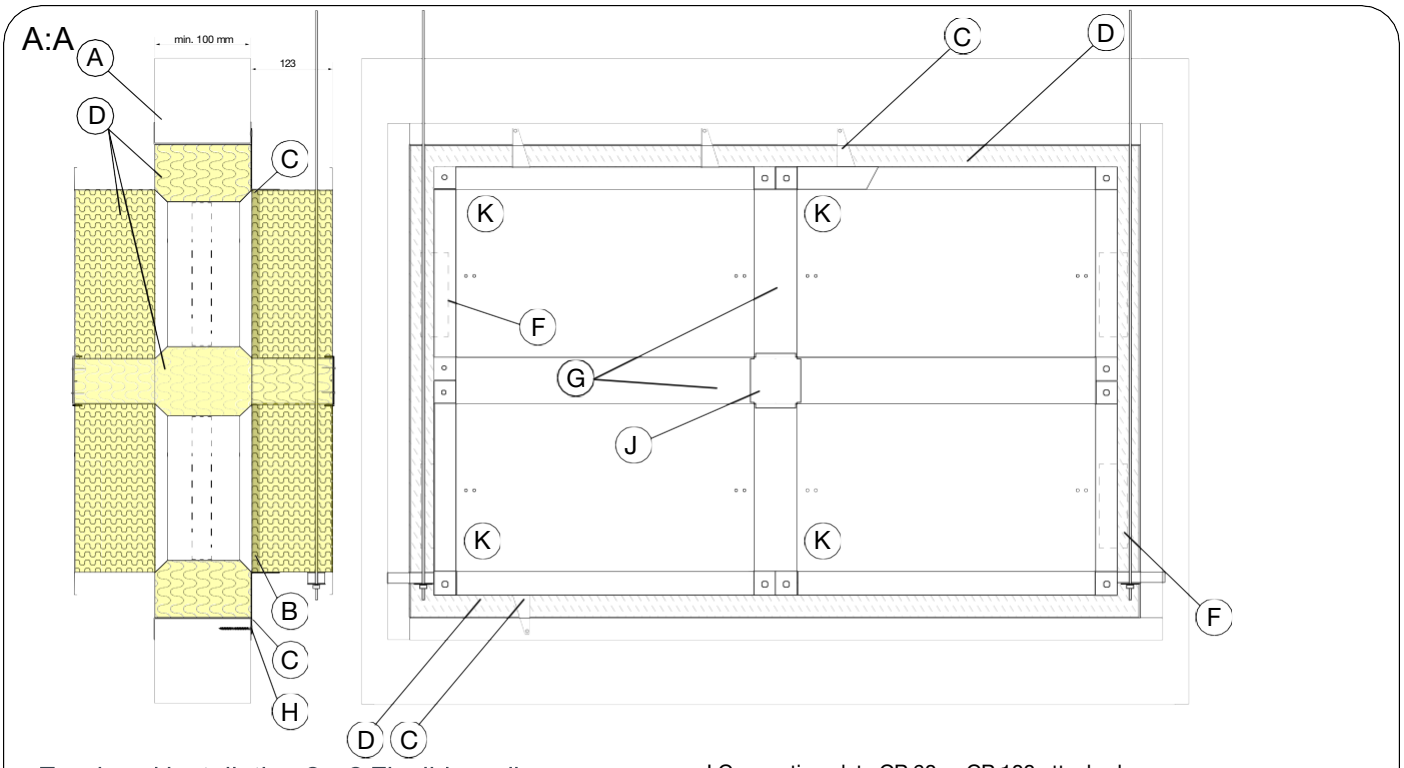

Eurobond installation 2 x 2 Flexible wall

A Flexible wall
B Limit mark
C Fixing bracket with screw hole Ød 6mm, min length 30 mm
D Sealing material, mineral wool, min. density 150 kg/m³
F Actuator position
G Connecting plate CF 60 or CF 100 attached iwith self-tapping screws every 150 mm
J Connecting plate CP 60 or CP 100 attached with self-tapping screws every 150 mm
E Intumescent fire resistant sealant
H Drywall screws 6x50 mm (optional)
K Fire damper casing

Classification

FD40: EI 90 (ve i↔o)S

* The images shown are for illustration purposes only and may not be an exact representation of the product.

DOP WALLS MATERIALS

Possible damper orientations

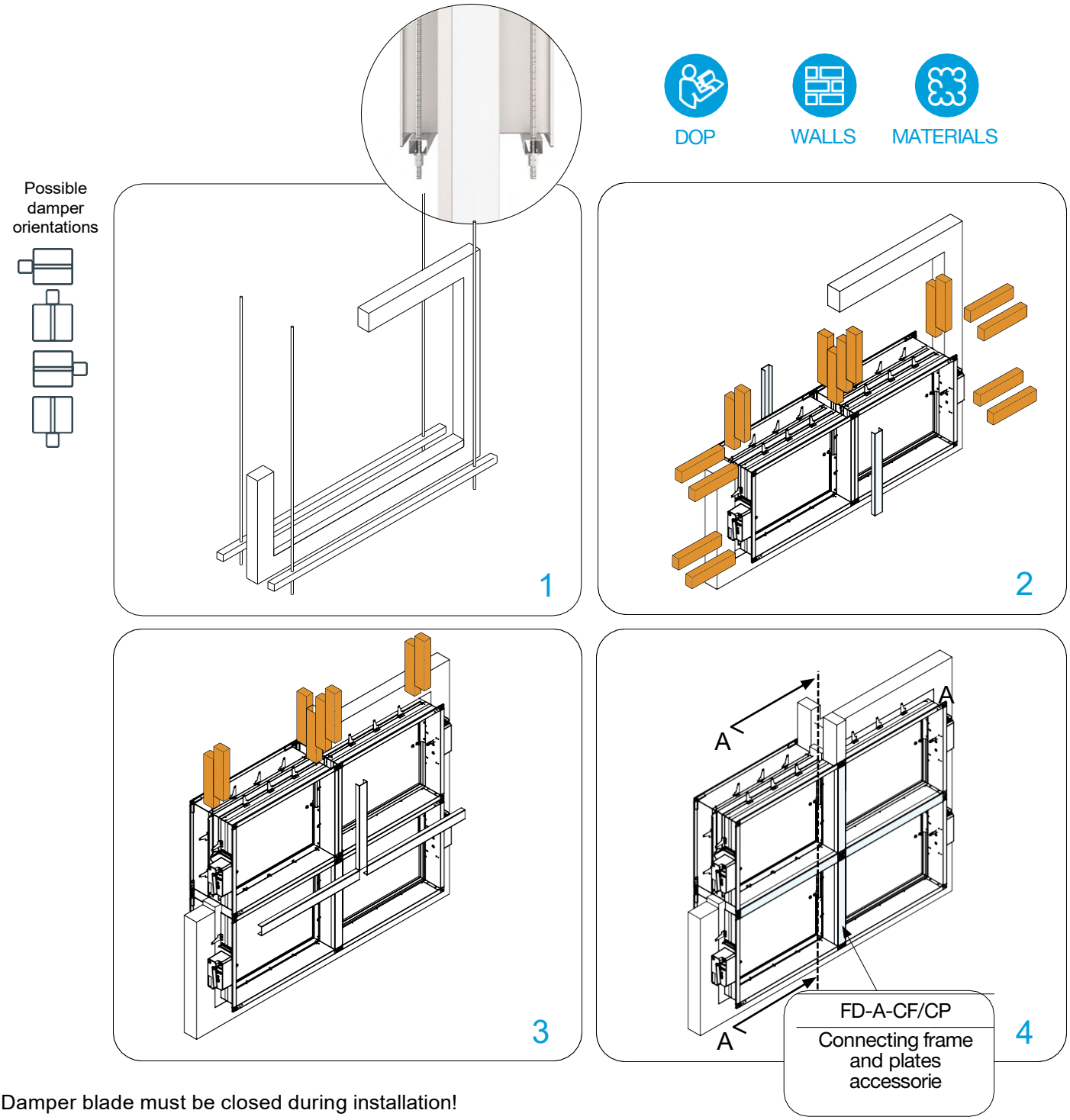

Damper blade must be closed during installation!

1. Create an opening in the wall of dimensions (2xB + CFXX mm + 80mm x 2xH + CFXX mm + 80mm) on the connection of two boards. The opening is re-inforced with L profiles and screws 6,3x25 on one sides and 6,3x120mm on other side and coated with 2 mm thick fire protection coating.

Connecting frame width:CF60 - Connecting frame 60 mm, CF100 - Connecting frame 100 mm

Install suspension, two M10 threded rods and “C” profile 45x30mm.
Please also refer to details 3-4 of the description on page 47 and consider the points below.

2. Place two lower dampers in the opening/ on the suspension, and fix dampers to the wall using screws. Place the vertical part from the installation kit to the dampers on both sides, and attach it using the self-tapping screws every 150 mm. Fill the space between the dampers and the wall with two layers of mineral wool, (23 kg/m^3 of density or higher)

3. Place two upper dampers and fix the dampers to the wall using the screws. Fill the space between the dampers and the wall with mineral wool.

4. Place the vertical part and two horizontal parts from the installation kit to the dampers on both sides, and attach it using the self-tapping screws every 150 mm. Fill the gap between dampers and wall on upper side with mineral wool and seal the connections of mineral wool with intumescent fire resistant sealant up to profile protrusions.

Test the operation of the damper blade!

* The images shown are for illustration purposes only and may not be an exact representation of the product.

Flexibile ceiling joint
Gypsum blocks flexibile wall

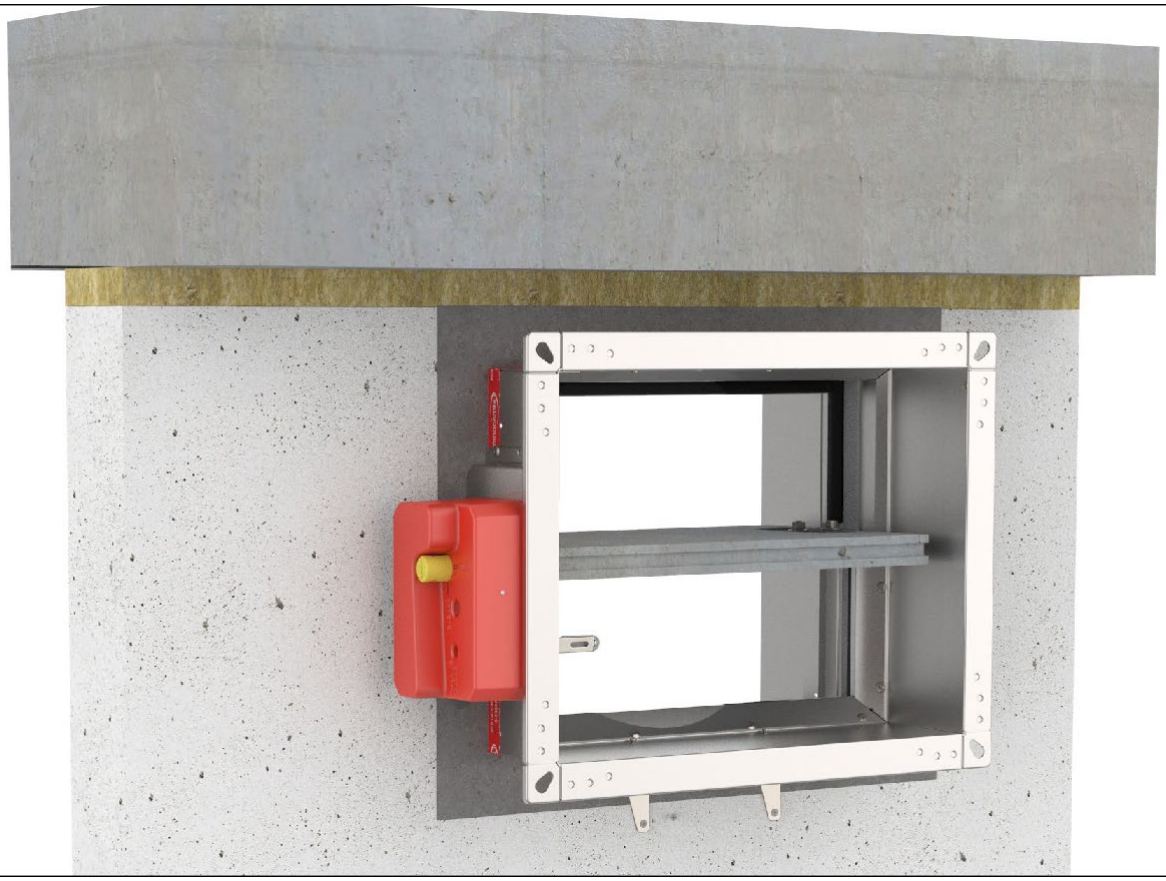

The wall is composed out of gypsum blocks (minimum density of 450 kg/m^3) and with minimum thickness of 100 mm.

Installation material is gypsum plaster and mineral wool (70 kg/m^3), thickness of the wool is 40 mm.

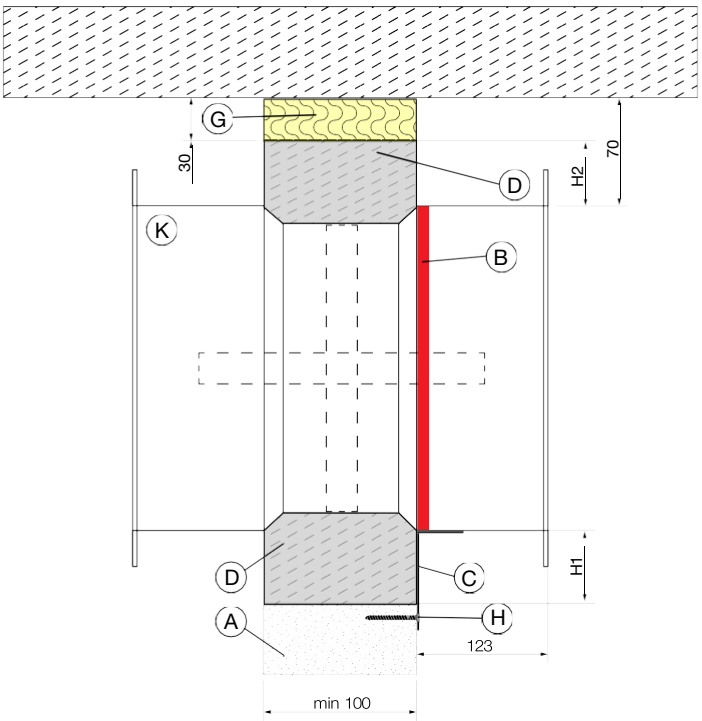

Flexibile ceiling joint installation

A Gypsum wall
B Limit mark
C Fixing bracket with screw hole Ød 6 mm,
min length 30 mm
D Gypsum plaster / Mortar sealing
G Mineral wool sheets, 70 kg/m^3, min. thickness 40 mm
H Masonry screw 6x50 mm (optional)
K Fire damper casing

Classification

FD25: EI 120 (ve i↔o)S
FD40: EI 120 (ve i↔o)S

* The images shown are for illustration purposes only and may not be an exact representation of the product.

Possible damper orientations

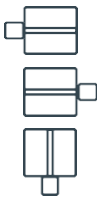

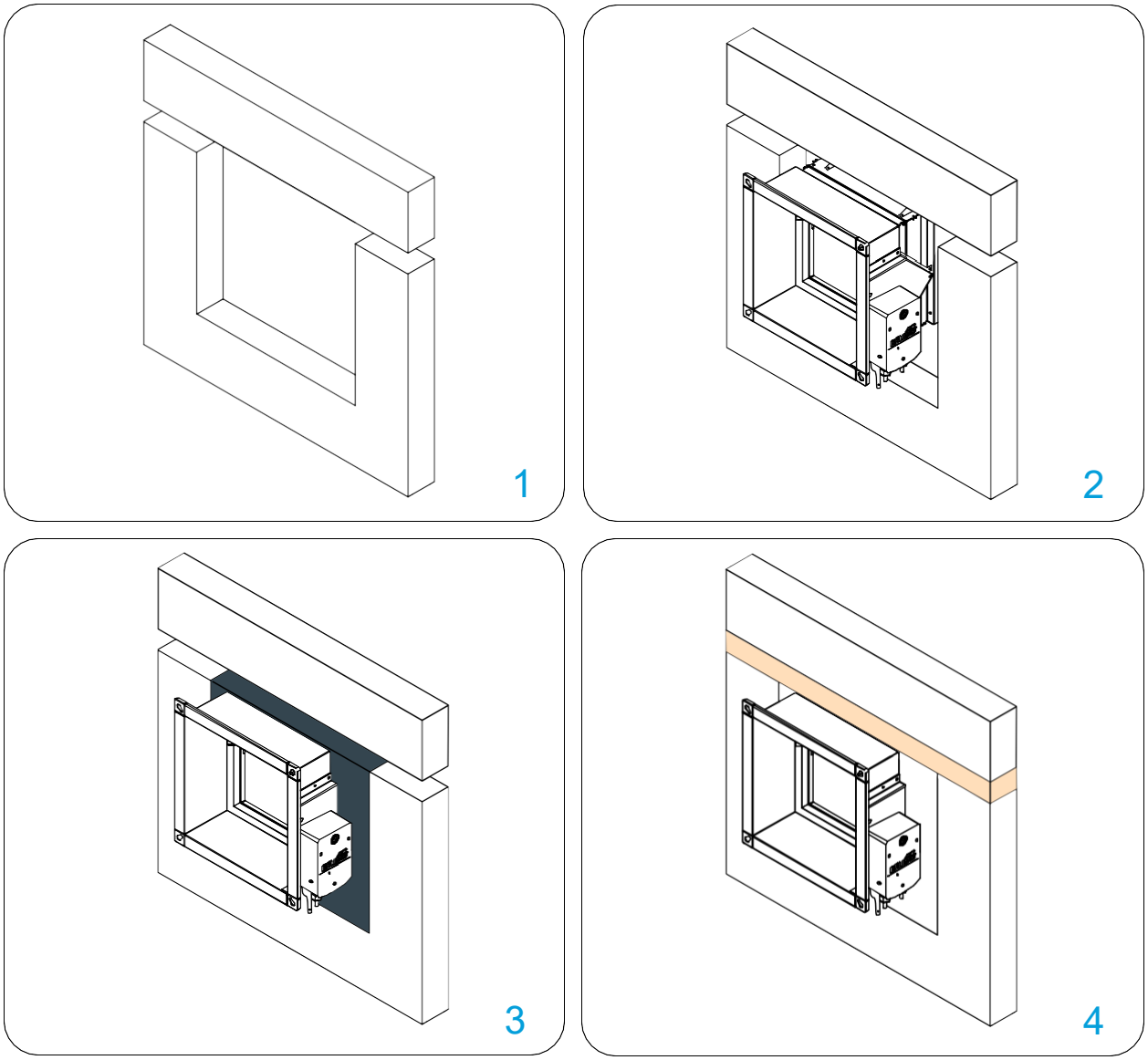

Damper blade must be closed during installation!

1. Create an opening in the wall B + 80 mm x H1 + 40 mm / H2 + 40 mm, 30mm below the ceiling.
Bend the mounting bracket by 90° on the down side. Insert the damper into the opening up to the limit mark on the damper.

2. For easier installation, the fire damper can be mounted on the wall. Use approved / suitable screws for this purpose. (The mounting hole has a diameter of 6 mm.)

3. Fill the space between the damper and the wall with gypsum plaster/ mortar.

4. Fill the space between the ceiling and the wall with mineral wool (70 kg/m^3, thickness 40 mm).

*Build the support for mortar installation according to the drawing.
*Multiple fire dampers can be installed next to each other or ceiling/wall with the minimal distance.

Test the operation of the damper blade!

* The images shown are for illustration purposes only and may not be an exact representation of the product.

Flexibile ceiling joint
Plasterboard type F wall

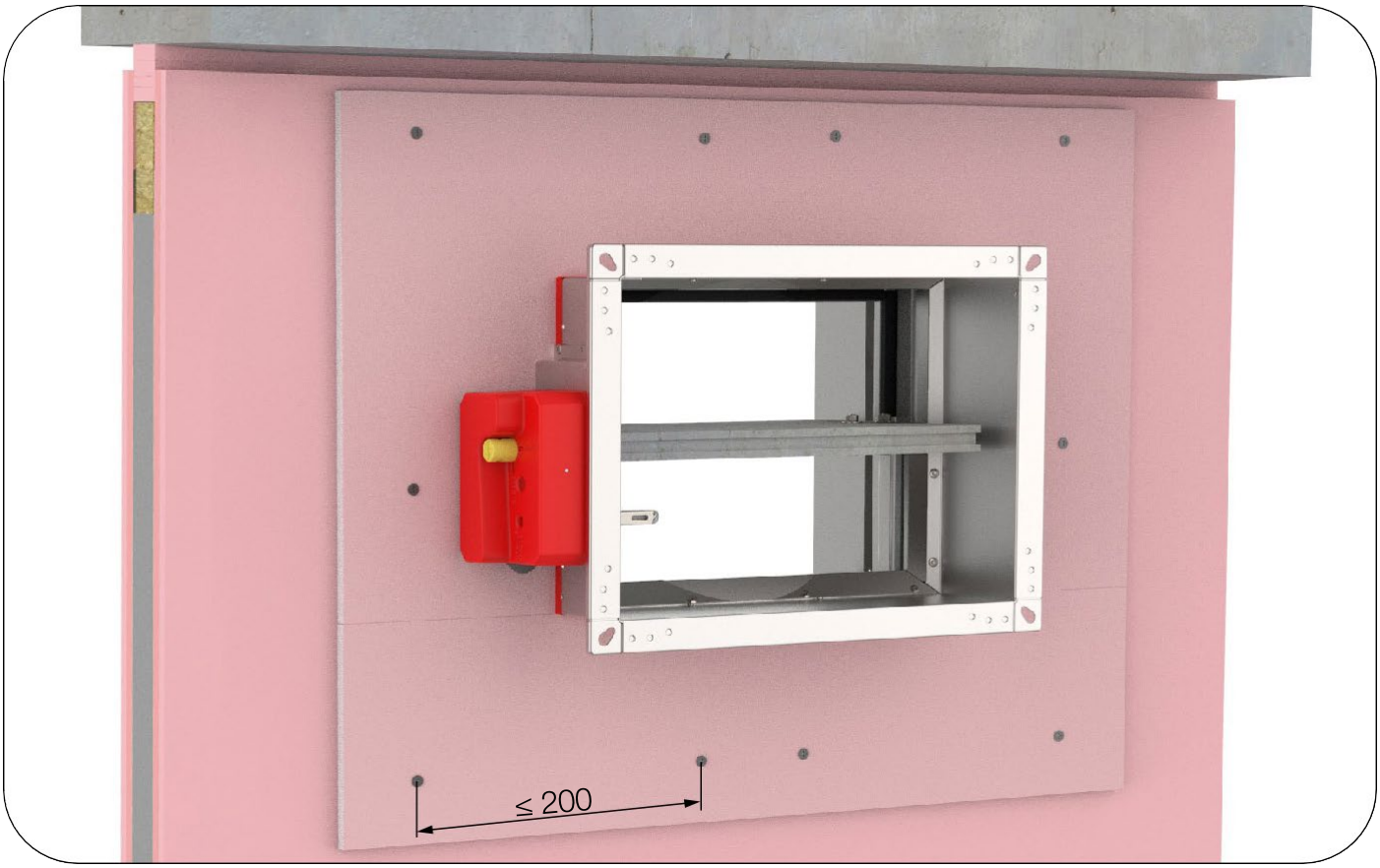

The wall is composed of 2x2 plasterboard boards, 12,5 mm thick, installed on a steel frame construction. To fulfill the classification it is NOT mandatory to use the mineral wool inside the wall (mineral wool with density up to 100 kg/m^3 can be used).The minimum thickness of the wall is 100 mm.

Installation material is gypsum plaster and mineral wool (115 kg/m^3), thickness of the wool is 50 mm.

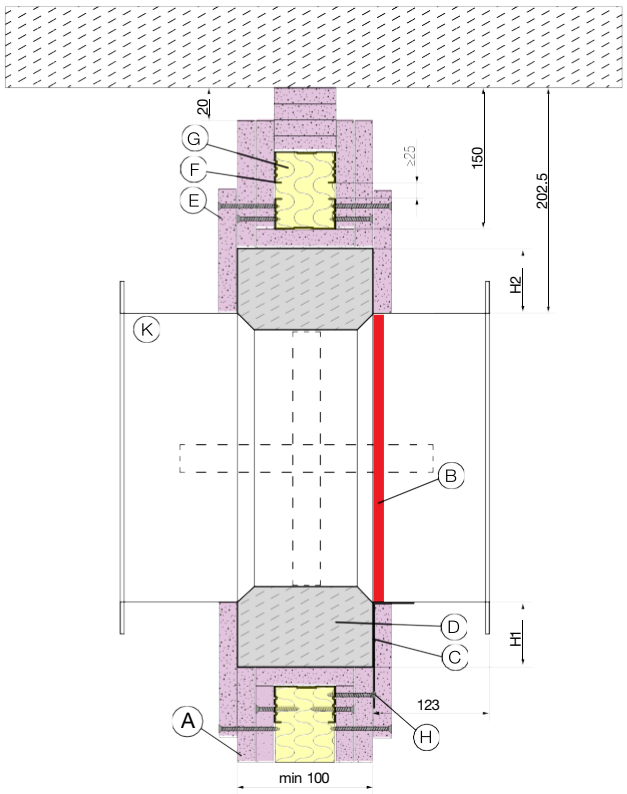

Flexibile ceiling joint installation

A Flexibile wall
B Limit mark
C Fixing bracket with screw hole Ød 6 mm, min length 30 mm
D Gypsum plaster / Mortar sealing
E GKF cover boards with drywall screws 35 mm
F UW 50 Profile and Mineral wool 50mm
G Mineral wool sheets, 70 kg/m^3, min. thickness 40 mm
H Drywall screws 6x50 mm (optional)
K Fire damper casing

Classification

FD25: EI 120 (ve i↔o)S

FD40: EI 120 (ve i↔o)S

* The images shown are for illustration purposes only and may not be an exact representation of the product.

Possible damper orientations

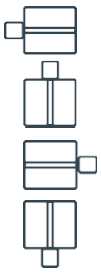

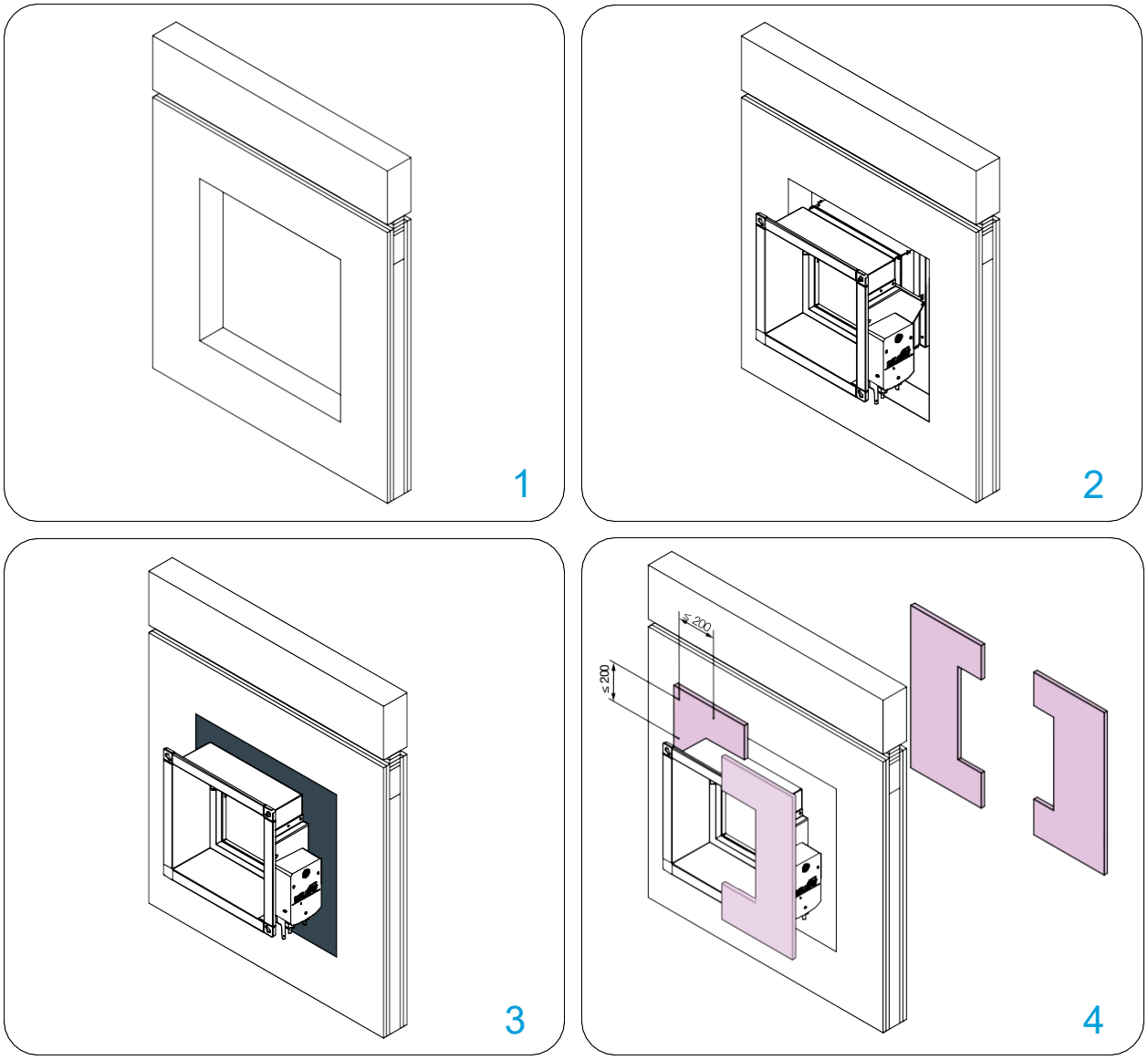

Damper blade must be closed during installation!

1. Prepare the substructure and wall cladding with plasterboard according to the technical drawing.
Create an opening in the wall measuring (B + 80 mm) x (H1 + 40 mm/ H2 + 40 mm)

Ensure that the wall cladding is not connected to the profile attached to the ceiling, so that it can accommodate ceiling movement without affecting the wall. Fill the gap between the ceiling segment and the wall with mineral wool.

2. For easier installation, the fire damper can be mounted on the wall. Use approved / suitable screws for this purpose. (The mounting hole has a diameter of 6 mm.)

3. Fill the space between the damper and the wall with gypsum plaster/ mortar.

4. Cover the wool with 12.5 mm thick gypsum plasterboard or accessories cover boards FD-A-CSP-BxH
Attach the plasterboard all around, using screws on the flexible wall. screw spacing. spaced <= 200 mm

*Build the support for mortar installation according to the drawing.
*Multiple fire dampers can be installed next to each other or ceiling/wall with the minimal distance.

Test the operation of the damper blade!

* The images shown are for illustration purposes only and may not be an exact representation of the product.

Rigid floor/ceiling installation (mortar sealing)

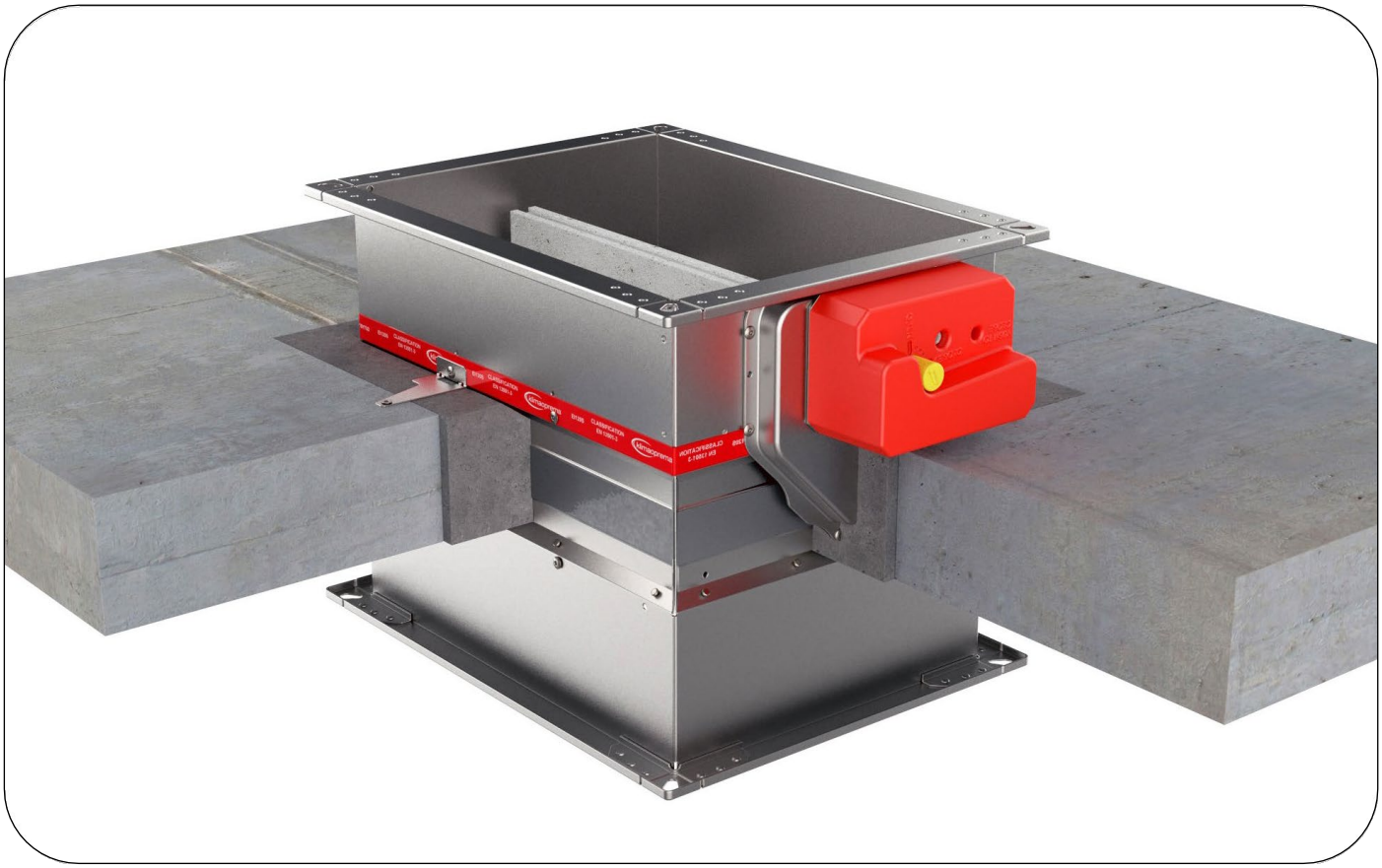

The floor/ceiling is composed of concrete blocks (minimum density of 450 kg/m^3) or reinforced concrete (minimum density of 2200 kg/m^3) and with a minimum thickness of 100 mm.
Installation material: gypsum plaster or mortar.

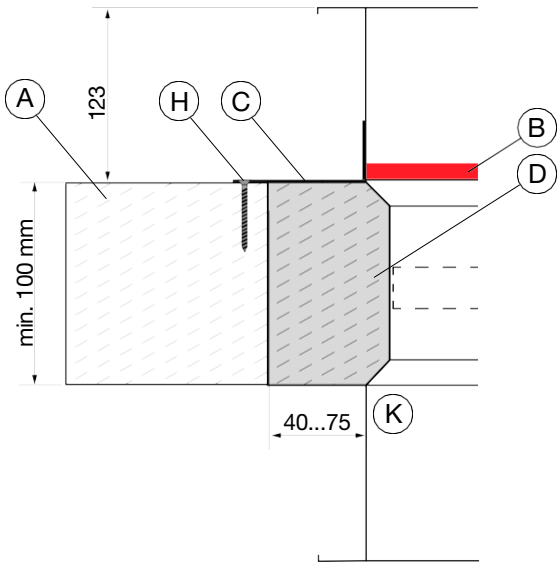

Installation in floor/ ceiling

A Rigid ceiling
B Limit mark
C Fixing bracket with screw hole Ød 6 mm, min length 30 mm
D Gypsum plaster / Mortar sealing
H Masonry screw 6x50 mm (optional)
K Fire damper casing

Classification

FD25: EI 120 (ve i↔o)S
FD40: EI 120 (ve i↔o)S

* The images shown are for illustration purposes only and may not be an exact representation of the product.

Possible damper orientations

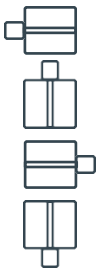

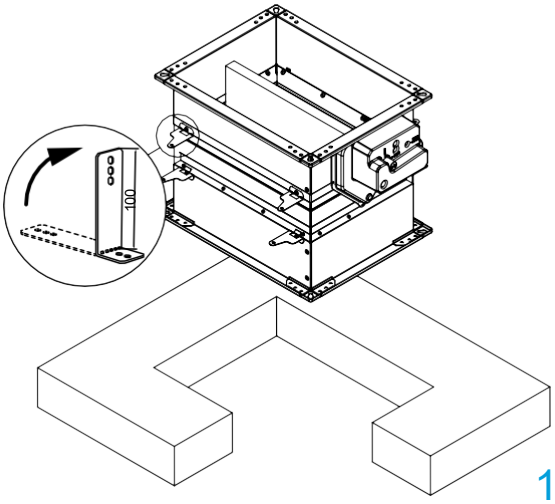

1

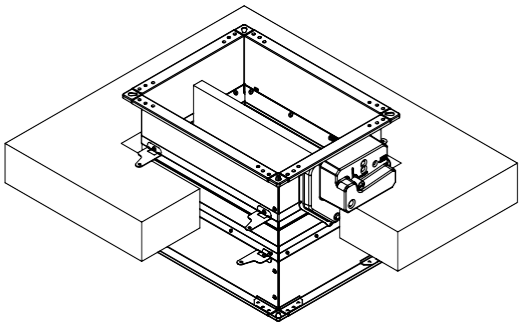

2

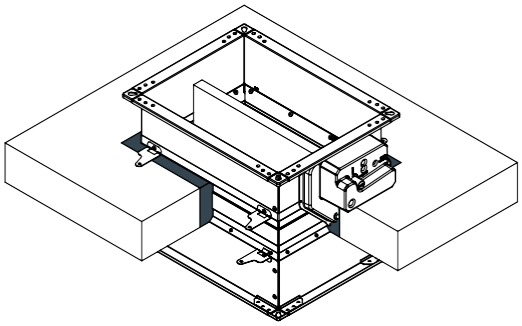

*Installation in floor 3

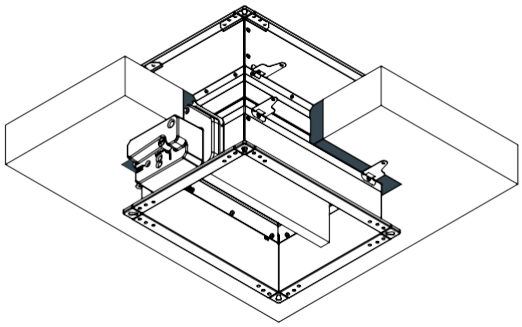

*Installation in ceiling 4

Damper blade must be closed during installation!

1. Recommended floor/ ceiling opening for the fire damper installation is (B + 80...150 mm) x (H + 80... 150mm). Bend the fixing bracket 90° (bracket screw hole is 6 mm in diameter). Insert fire damper into floor / ceiling to the limit mark on the damper.

2. For easier installation, the fire damper can be mounted on the floor / ceiling. Use approved / suitable screws for this purpose. (The mounting hole has a diameter of 6 mm.)

3/4*. Fill the space between the damper and the floor/ceiling with mortar.

*Build the support for mortar installation according to the drawing.
*Multiple fire dampers can be installed next to each other or ceiling/wall with the minimal distance.

Test the operation of the damper blade!

* The images shown are for illustration purposes only and may not be an exact representation of the product.

Suspension for mortarless floor installation

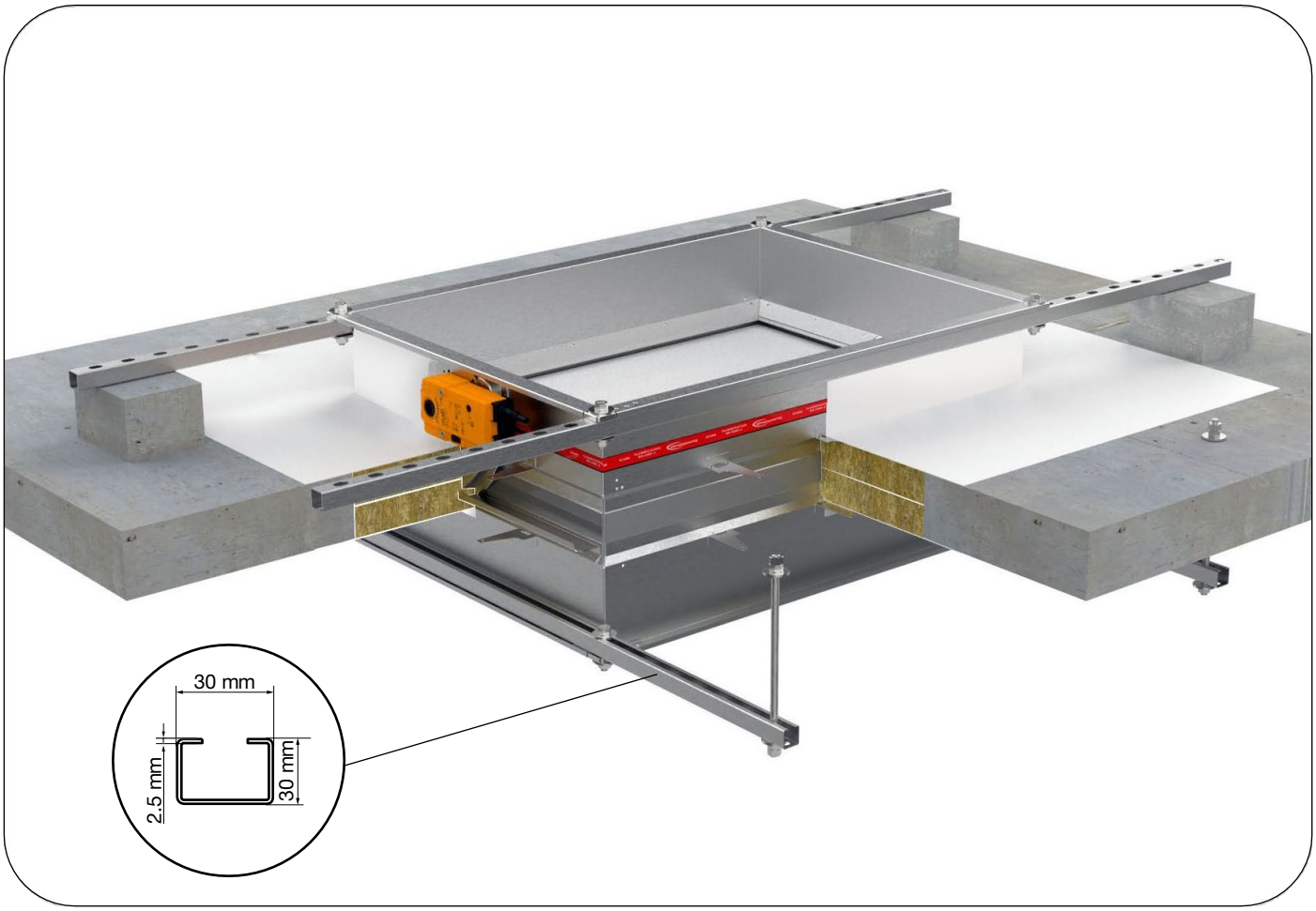

Suspension systems are required for the Fire Batt/Weichschott installation of the fire damper with mineral wool in floor slabs. Fire dampers can be suspended from solid floor slabs using adequately sized threaded rods. Load the suspension system only with the weight of the fire damper. Ducts must be suspended separately.

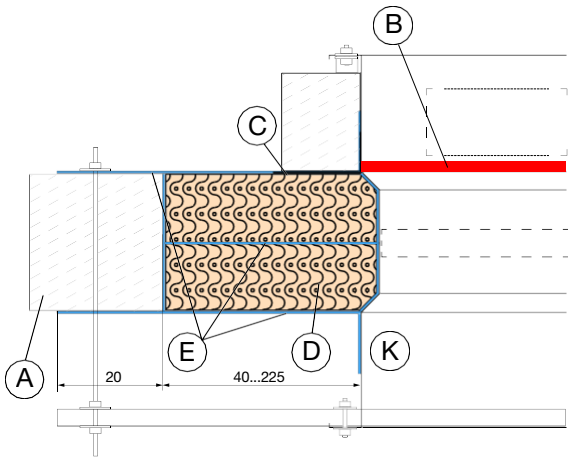

Floor installation

Actuator down

A Rigid floor/ceiling
B Limit mark
C Fixing bracket with screw hole Ød 6mm, min length 30 mm
D Sealing material, mineral wool, min. density 150 kg/m³
E Intumescent fire resistant sealant
H Masonry screw 6x50mm (optional)
K Fire damper casing
I Threaded rod suspension.

Classification

FD25: EI 90 (ve i↔o)S

FD40: EI 90 (ve i↔o)S

* The images shown are for illustration purposes only and may not be an exact representation of the product.

DOP WALLS MATERIALS

Possible damper orientations

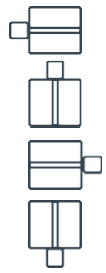

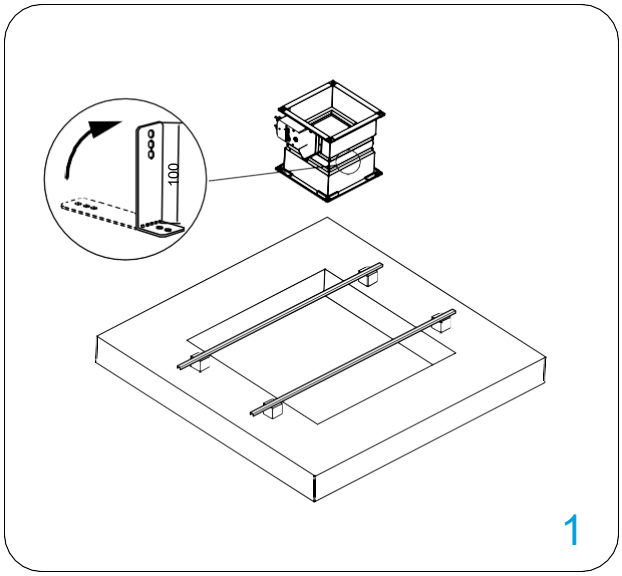

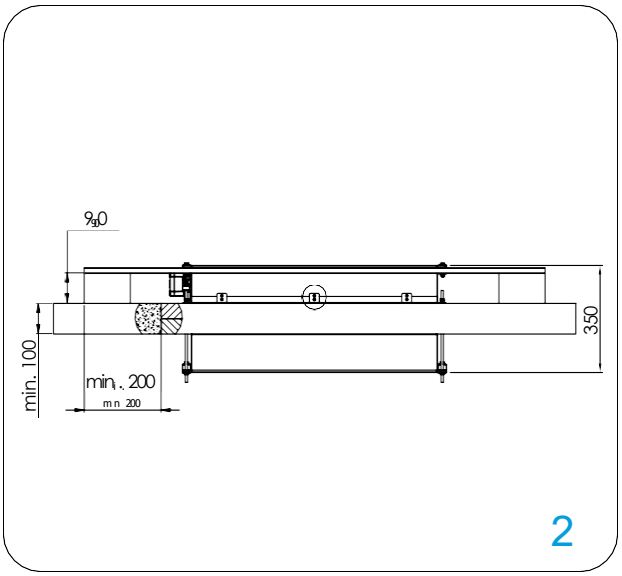

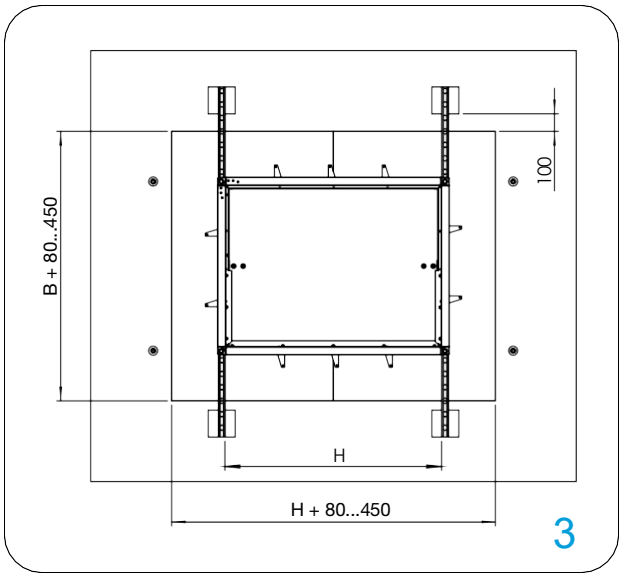

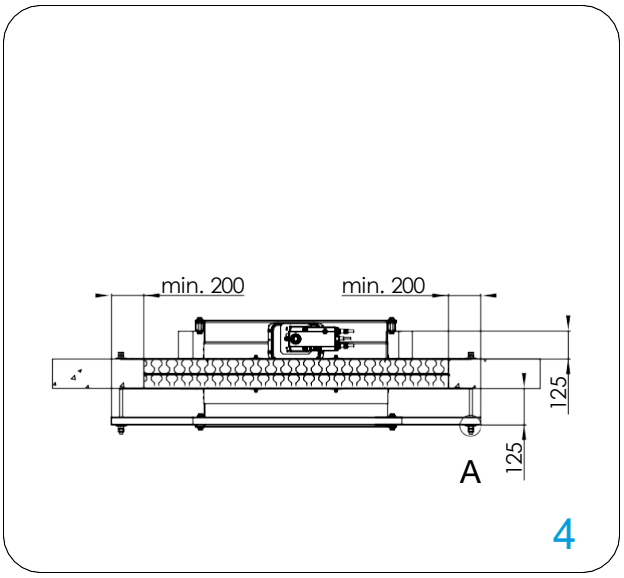

1. Create an opening in the floor/ ceiling (B + 80...450 mm) x (H + 80...450 mm). Bend the mounting bracket by 90°. Insert the damper into the opening up to the wall boundary mark on the damper.

For easier installation, the fire damper can be mounted on the floor / ceiling. Use approved / suitable screws for this purpose. (The mounting hole has a diameter of 6 mm.)

2. Suspension strut should be connected with drop rods (8 mm) to the floor. It is used to support the damper and ease the installation.

3. Support steel C profiles by 90 mm high peace of aerated concrete or similar rigid material.

4. Suspend the fire damper to the steel C profiles. Close the space between casing and floor with Firestop board (Firebatt) 2 x 50 mm (minimum density of 140 kg/m^3) and coat the casing.

Damper blade must be closed during installation!

Test the operation of the damper blade!

* The images shown are for illustration purposes only and may not be an exact representation of the product.

Suspension for mortarless ceiling installation

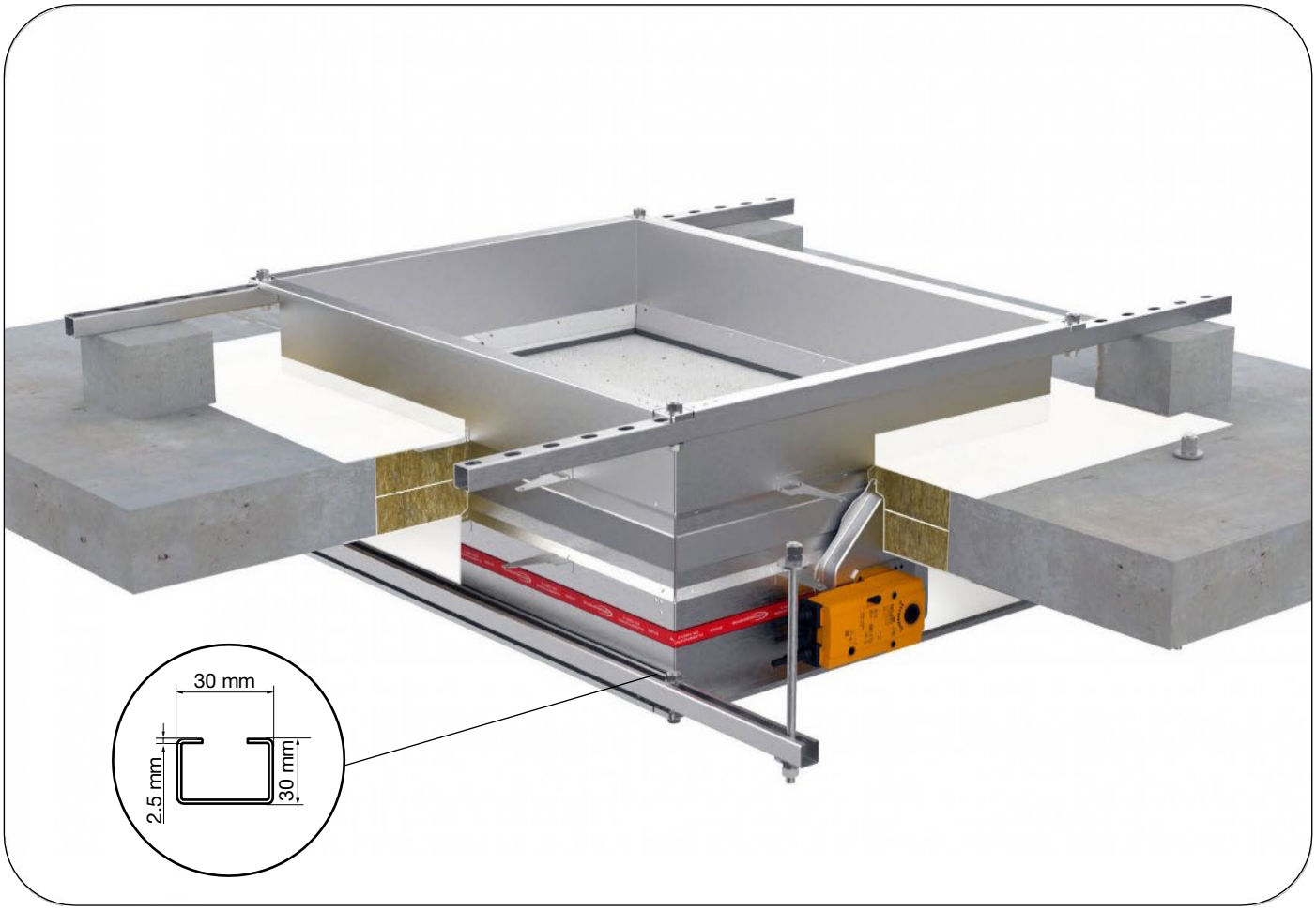

Suspension systems are required for the Fire Batt/Weichschott installation of the fire damper with mineral wool in floor ceiling slabs. Fire dampers can be suspended from solid ceiling slabs using adequately sized threaded rods. Load the suspension system only with the weight of the fire damper. Ducts must be suspended separately.

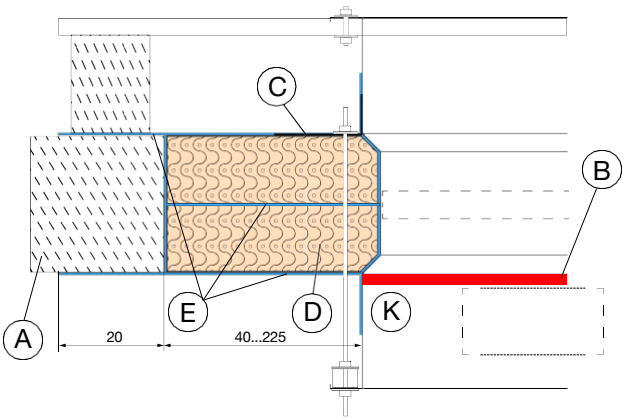

Ceiling installation

Actuator up

A Rigid wall
B Limit mark
C Fixing bracket with screw hole
Ød 6mm, min length 30 mm
D Sealing material, mineral wool, min. density 150 kg/m^3
E Intumescent fire resistant sealant
H Masonry screw 6x50mm (optional)
K Fire damper casing
I Threaded rod suspension.

Classification

FD25: EI 90 (ve i↔o)S
FD40: EI 90 (ve i↔o)S

* The images shown are for illustration purposes only and may not be an exact representation of the product.

DOP WALLS MATERIALS

Possible damper orientations

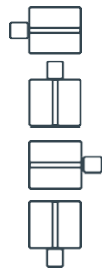

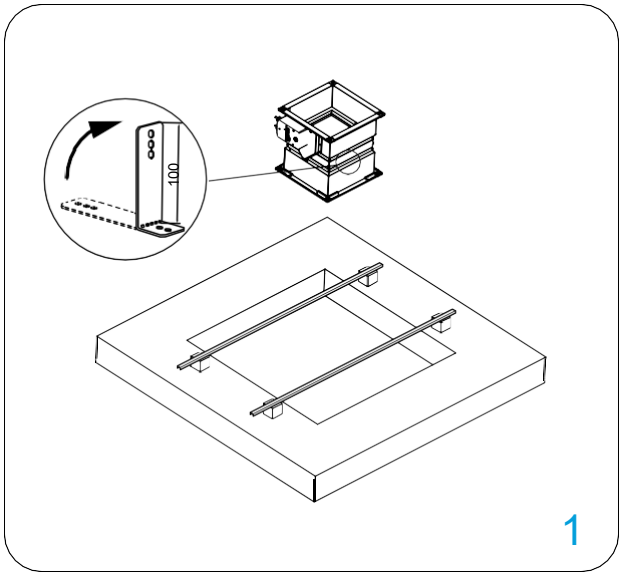

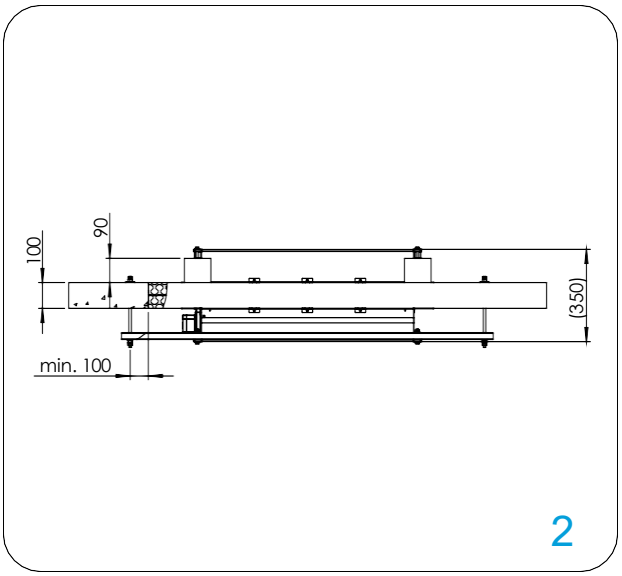

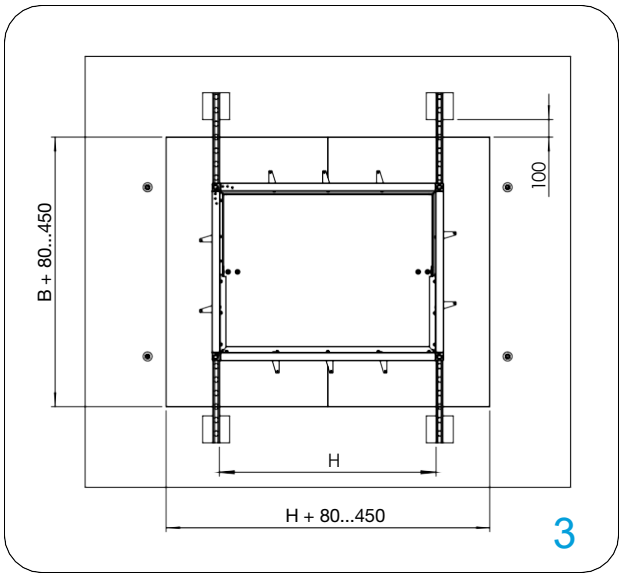

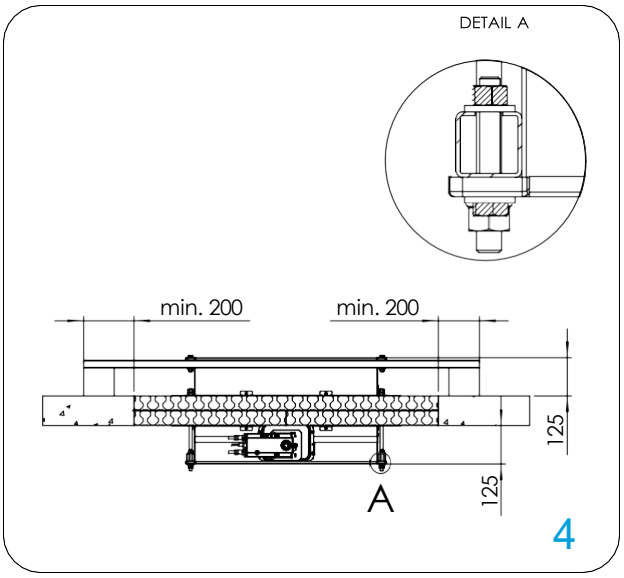

1. Create an opening in the floor/ ceiling (B + 80...450 mm) x (H + 80...450 mm). Bend the mounting bracket by 90°. Insert the damper into the opening up to the wall boundary mark on the damper.

For easier installation, the fire damper can be mounted on the floor / ceiling. Use approved / suitable screws for this purpose. (The mounting hole has a diameter of 6 mm.)

2. Suspension strut should be connected with drop rods (8 mm) to the ceiling slab above. It is used to support the damper and ease the installation.

3. Support steel C profiles by 90 mm high peace of aerated concrete or similar rigid material.

4. Suspend the fire damper to the steel C profiles. Close the space between casing and floor/ceiling with Firestop board (Firebatt) 2x50 mm (minimum density of 140 kg/m^3) and coat the casing.

Damper blade must be closed during installation!

Test the operation of the damper blade!

* The images shown are for illustration purposes only and may not be an exact representation of the product.

Rigid floor/ceiling installation (Fire Batt/Weichschott)

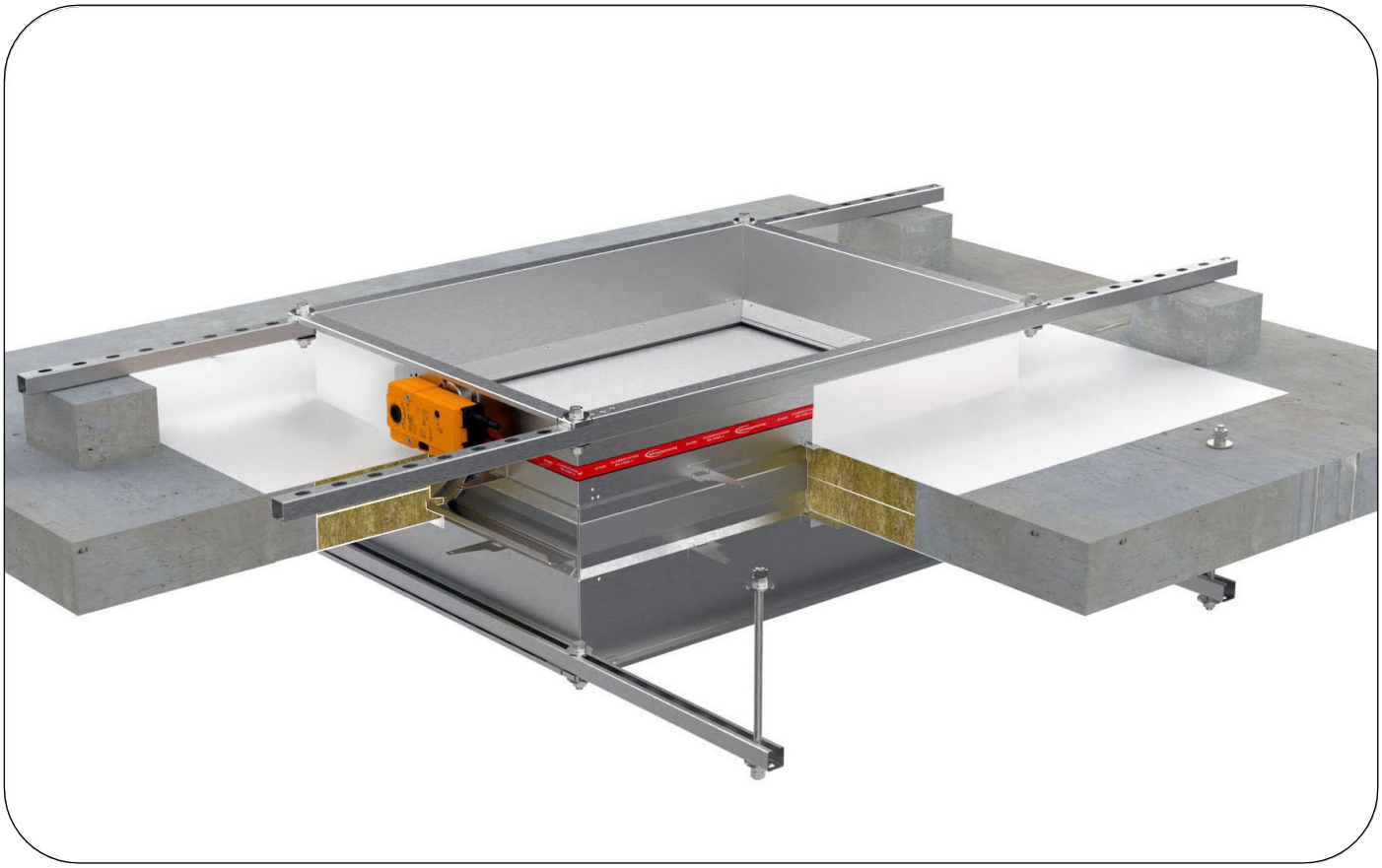

The floor/ceiling is composed of concrete blocks (minimum density of 450 kg/m^3) or reinforced concrete (minimum density of 2200 kg/m^3) and with a minimum thickness of 100 mm.
Installation material: mineral wool (minimum density of 140 kg/m^3), fire protection coating.

Suspension systems are required for the Fire Batt/Weichschott installation of the fire damper with mineral wool in floor and ceiling slabs.

* The images shown are for illustration purposes only and may not be an exact representation of the product.

Possible damper orientations

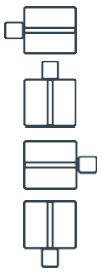

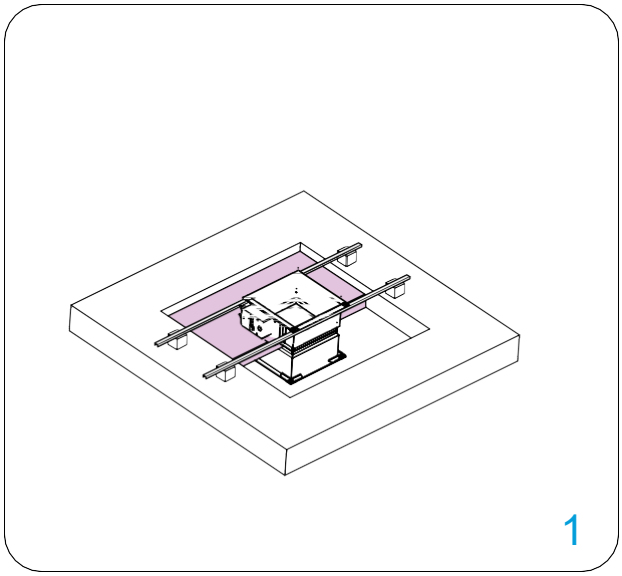

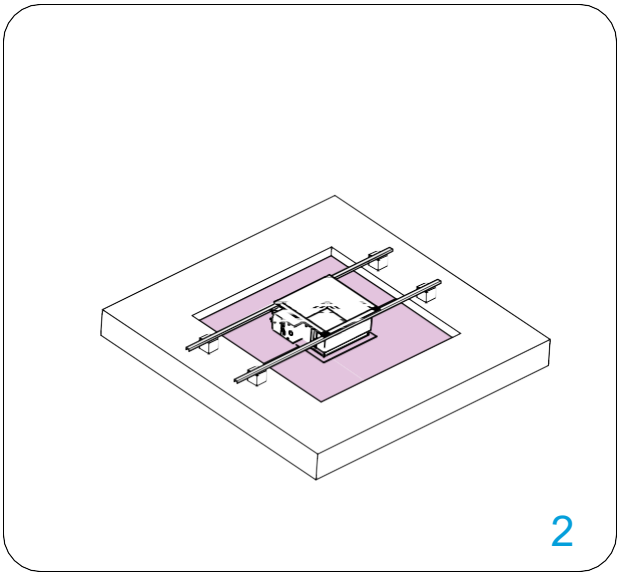

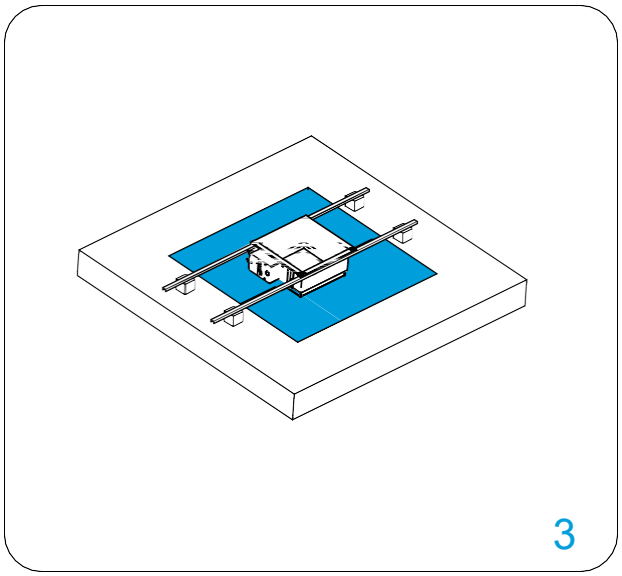

Damper blade must be closed during installation!

1. Close the gap between the housing and the wall with the first layer of mineral wool (50 mm thick, coated on the inside). Seal the joints between the pieces of mineral wool with intumescent, fire-resistant sealant.

2. Close the gap between the housing and the wall with the second layer of mineral wool (50 mm thick, coated on the inside). The joints between the mineral wool pieces must be sealed with intumescent, fire-resistant sealant.

3. The outside of the mineral wool and the damper housing must be coated with a 2 mm thick fire protection coating. The damper housing should be coated up to the profile projections.

*Fire Batt floor/ceiling installations require a suspension for the fire damper.

Test the operation of the damper blade!

* The images shown are for illustration purposes only and may not be an exact representation of the product.

Suspension for mortarless installation close to ceiling

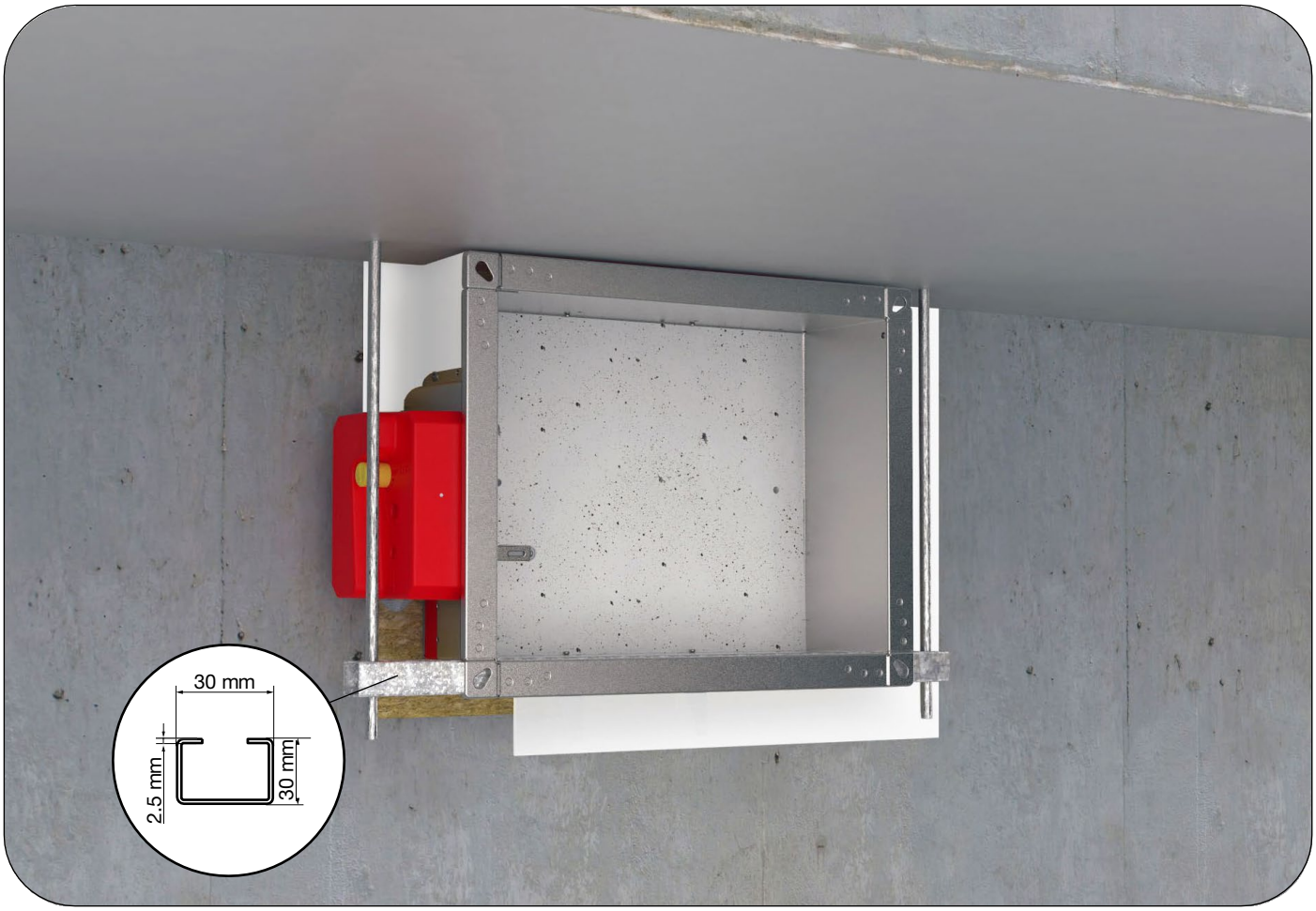

Suspension systems are required for the dry mortarless installation of the fire damper with mineral wool in solid walls and flexible walls. Fire dampers can be suspended from solid ceiling slabs using adequately sized threaded rods. Load the suspension system only with the weight of the fire damper. Ducts must be suspended separately.
Refers to dampers that are installed less than 80 mm to the ceiling!

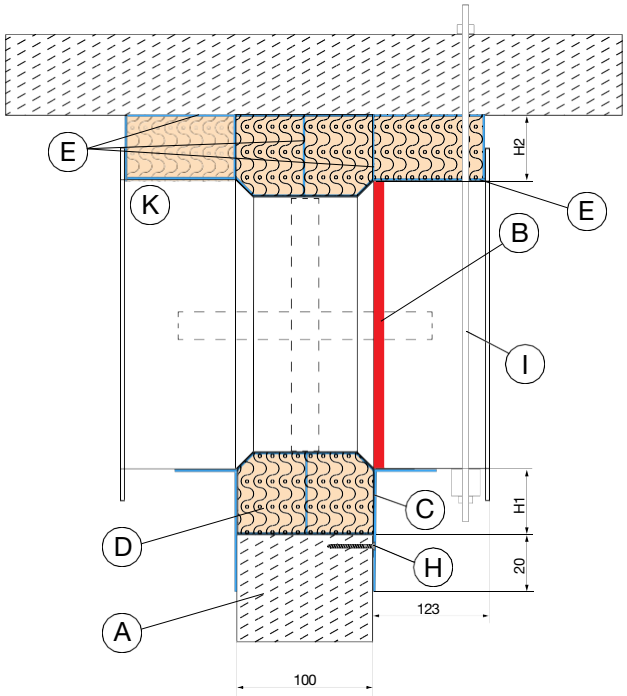

Close to ceiling installation

A Rigid wall
B Limit mark
C Fixing bracket with screw hole Ød 6mm, min length 30 mm
D Sealing material, mineral wool, min. density 150 kg/m³,from the top side, apply mineral wool in width of the damper (from flange to flange)
E Intumescent fire resistant sealant,
Cover all layers with fire resistant sealant on all surfaces
H Masonry screw 6x50mm (optional)
K Fire damper casing
I Threaded rod suspension.

Classification

FD25: EI 90 (ve i↔o)S
FD40: EI 90 (ve i↔o)S

* The images shown are for illustration purposes only and may not be an exact representation of the product.

Possible damper orientations

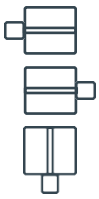

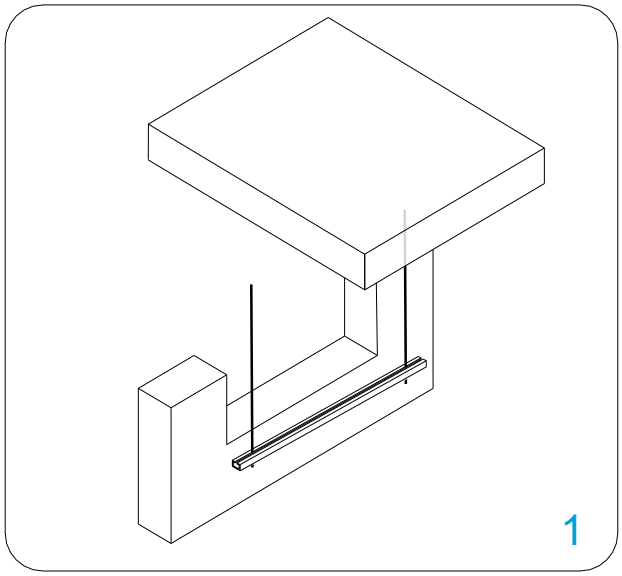

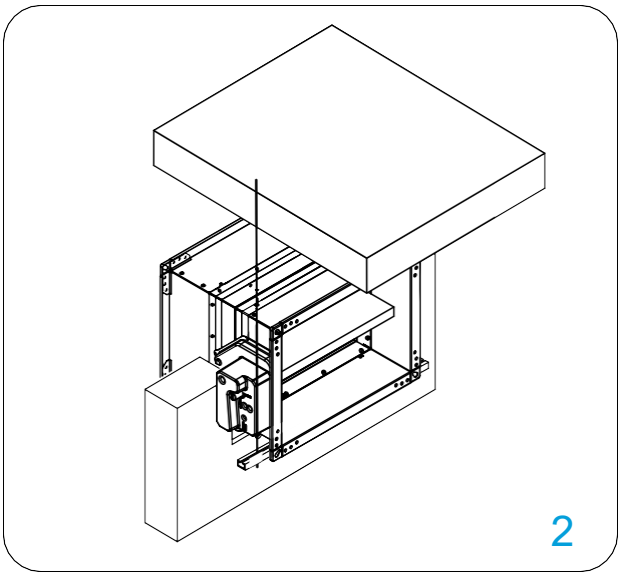

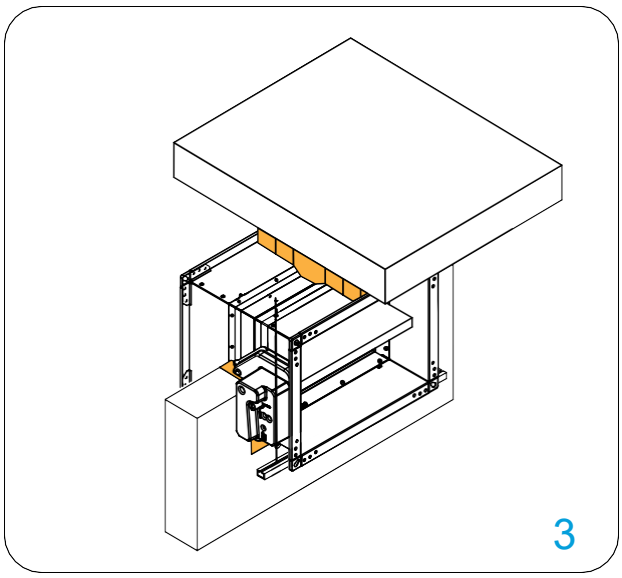

Damper blade must be closed during installation!

1. Create an opening (B + 80...450 mm) x (H1 + 40...225 mm) / (H2 + 30...80 mm) The opening to the ceiling must be large enough to install the seal! (30...80 mm) Install threaded rods (8 mm) to the ceiling above.
WARNING! Provide enough space for servicing and testing the actuator!

2. Bend the fixing bracket 90° (bracket screw hole is 6 mm in diameter). Insert fire damper into wall to the wall limit mark on the damper. Fix the C profile on the drop rods using M8 screws.

3. Close the space between casing and wall with mineral wool (minimum density of 140 kg/m^3). Connections of mineral wool should be sealed with intumescent fire resistant sealant. Mineral wool and damper casing must be coated with 2 mm.

*Multiple fire dampers can be installed next to each other or ceiling/wall with the minimal distance.

Test the operation of the damper blade!

* The images shown are for illustration purposes only and may not be an exact representation of the product.

Rigid wall installation
Applique installation frame

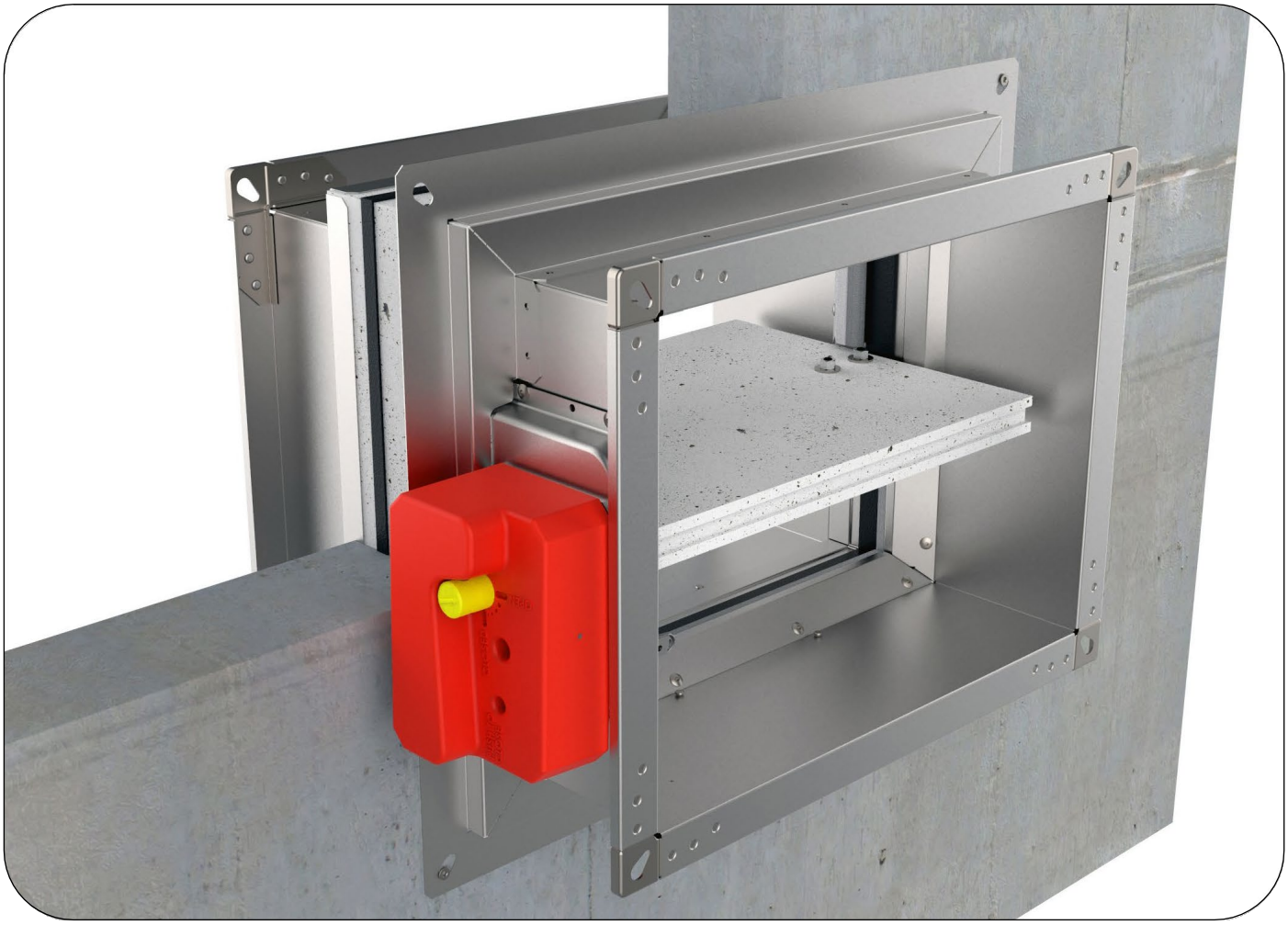

The wall is composed of concrete blocks (minimum density of 450 kg/m^3) or reinforced concrete (minimum density of 2200 kg/m^3) and with a minimum thickness of 100 mm.

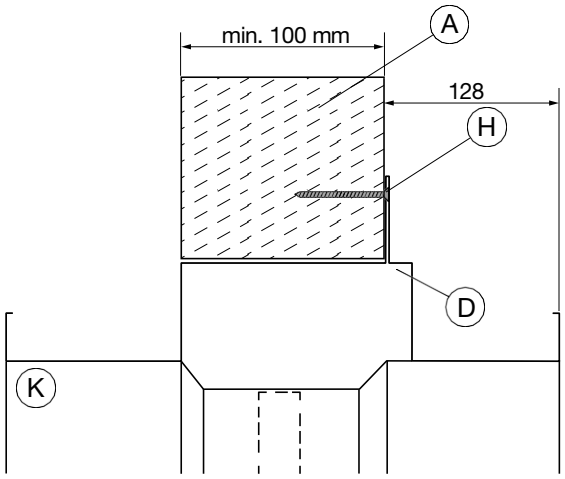

Rigid wall installation

A Rigid wall
H Masonry screw 4 pcs, 4,8x60 mm
D Applique installation kit
K Fire damper casing

Classification

FD25: EI 90 (ve i↔o)S
FD40: EI 90 (ve i↔o)S

* The images shown are for illustration purposes only and may not be an exact representation of the product.

Possible damper orientations

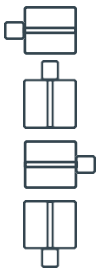

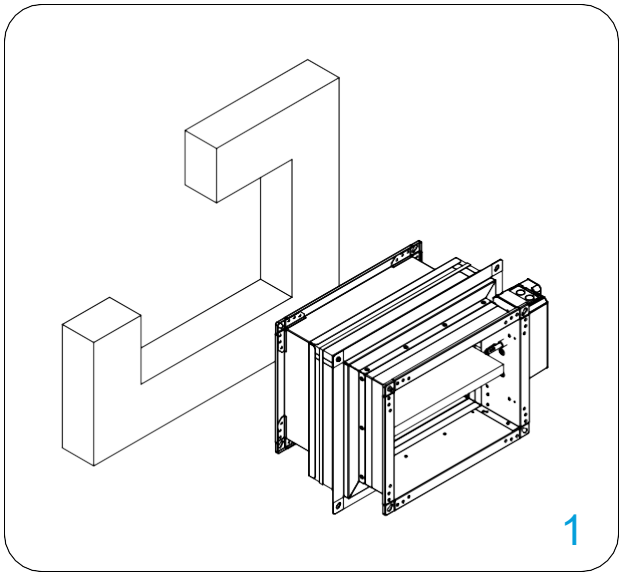

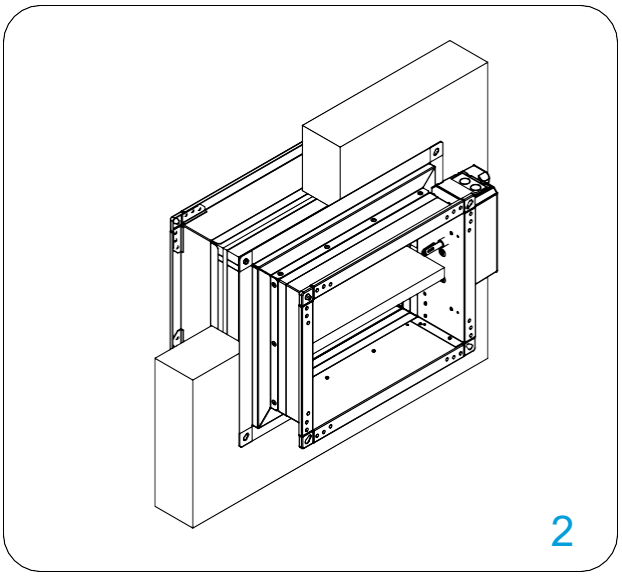

Damper blade must be closed during installation!

1. Recommended wall opening for the fire damper.
   mounting hole: bxh = (B+ 70...80mm) x (H + 70...80mm)

2. Insert fire damper into wall and fasten with masonry screws (4 pcs, 4,8x60 mm).

Test the operation of the damper blade!

* The images shown are for illustration purposes only and may not be an exact representation of the product.

Gypsum blocks wall installation
Applique installation frame

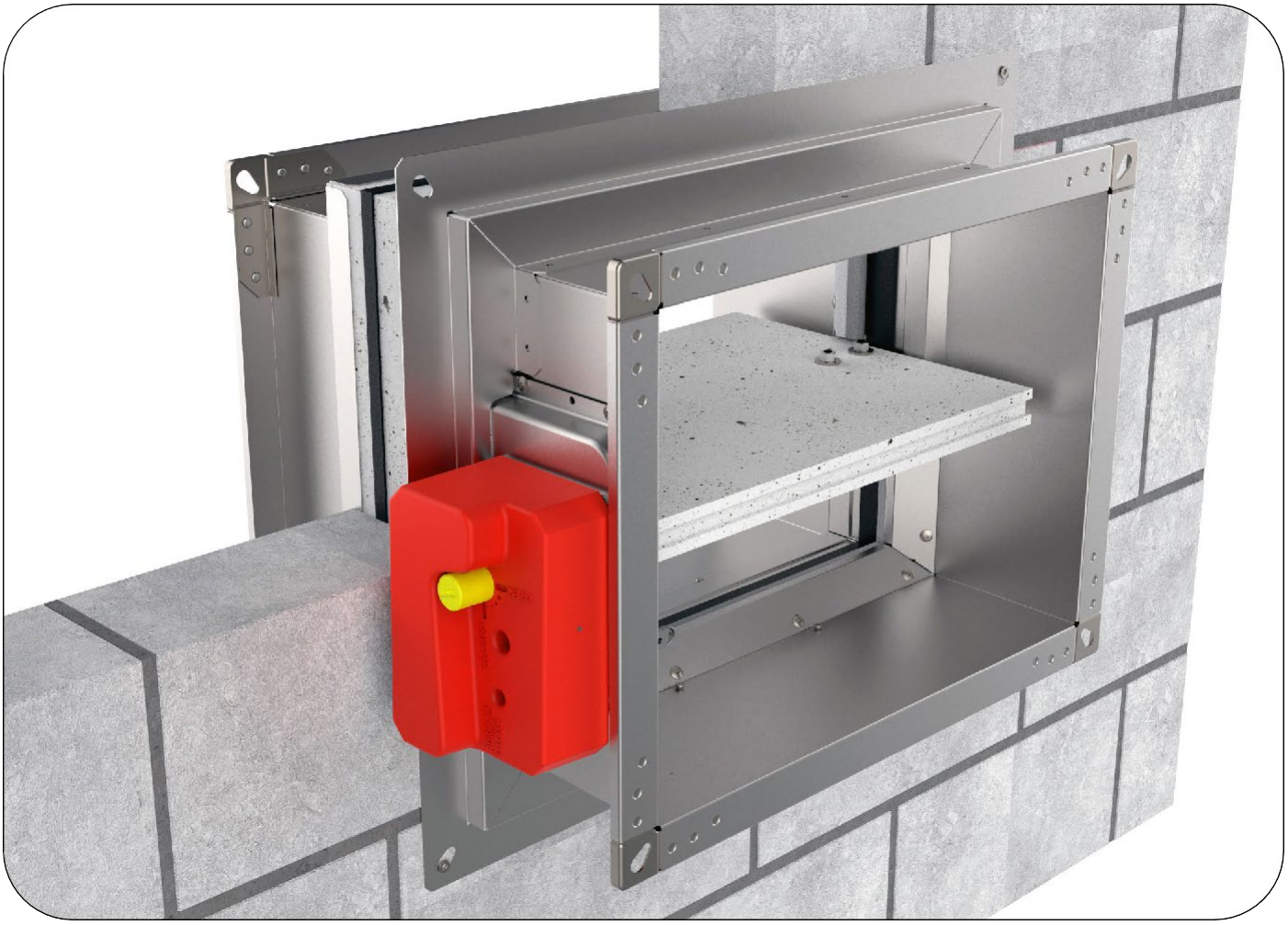

The wall is composed of gypsum blocks (minimum density of 995 kg/m^3), and with minimum thickness of 70 mm.

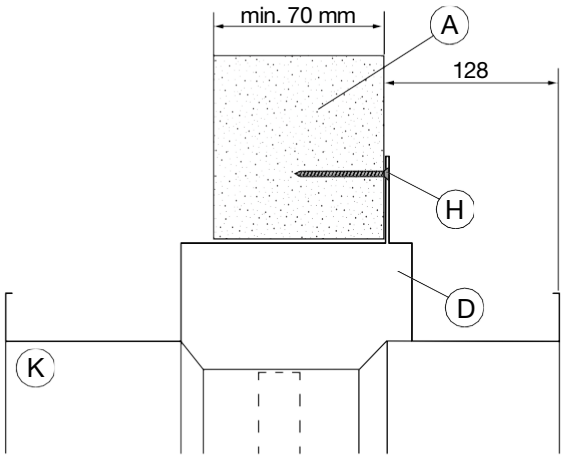

Gypsum blocks wall installation

A Gypsum wall
H Masonry screw 4 pcs, 4,8x60 mm
D Applique installation kit
K Fire damper casing

Classification

FD25: EI 90 (ve i↔o)S
FD40: EI 90 (ve i↔o)S

* The images shown are for illustration purposes only and may not be an exact representation of the product.

Possible damper orientations

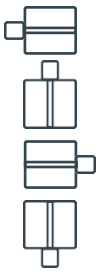

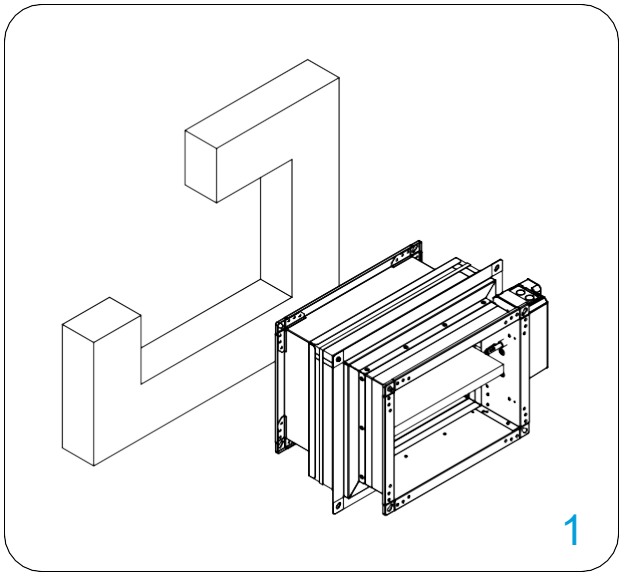

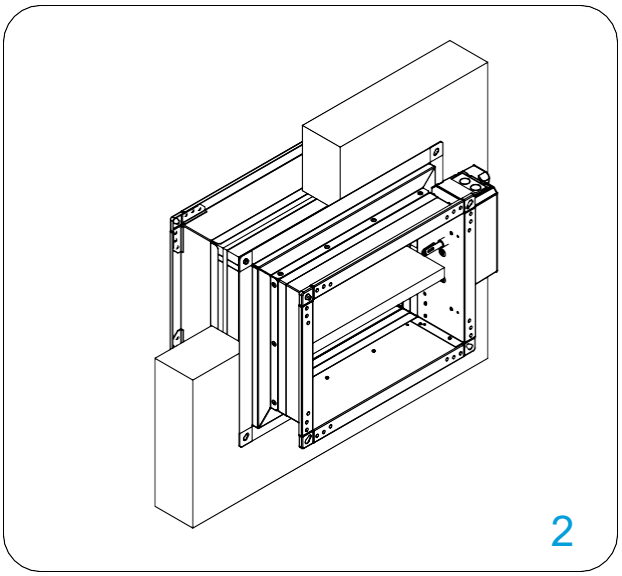

Damper blade must be closed during installation!

1. Recommended wall opening for the fire damper.
   mounting hole: bxh = (B+ 70...80mm) x (H + 70...80mm)

2. Insert fire damper into wall and fasten with masonry screws (4 pcs, 4,8x60 mm).

Test the operation of the damper blade!

* The images shown are for illustration purposes only and may not be an exact representation of the product.

Flexible wall installation
Applique installation frame

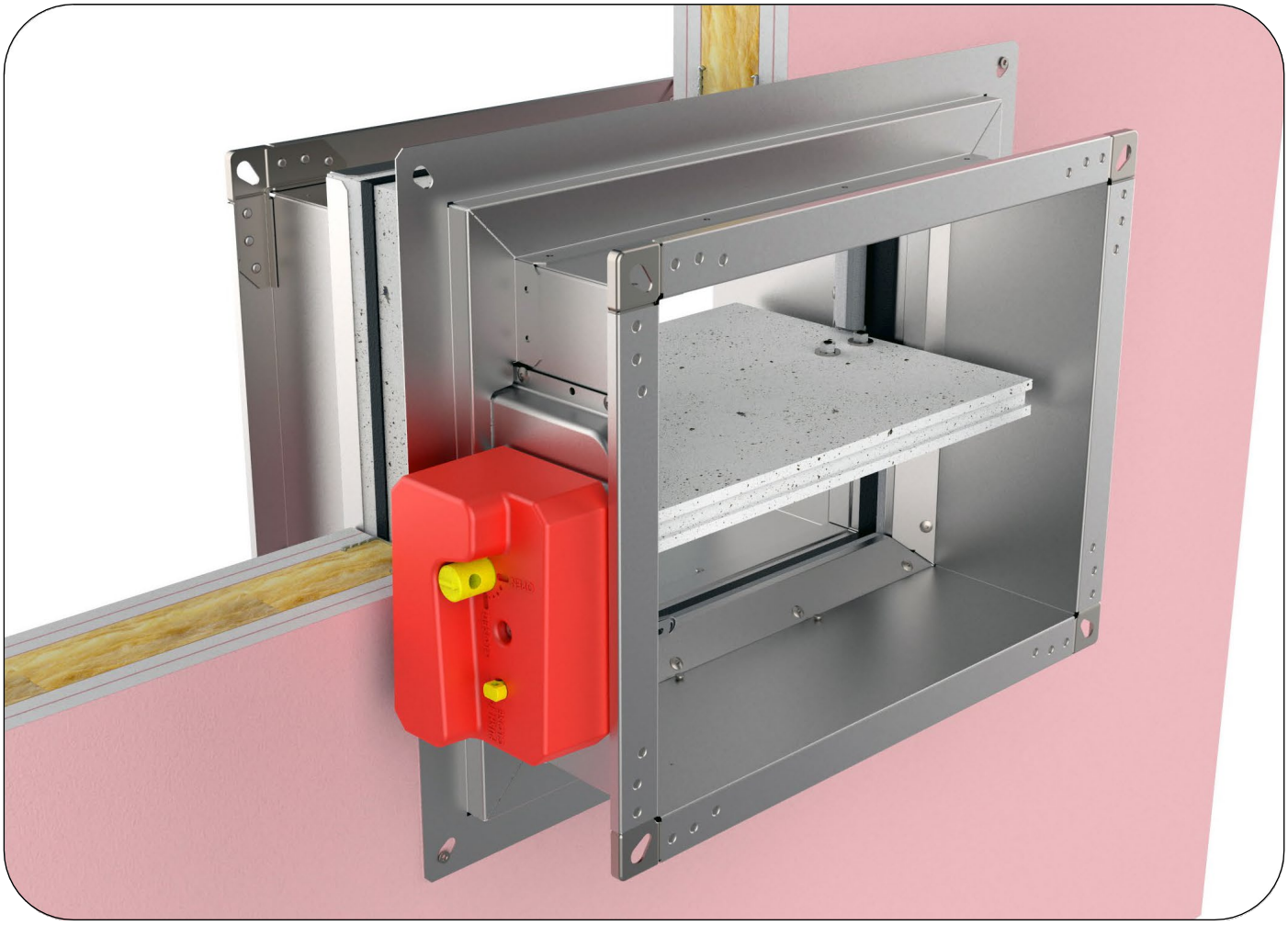

The wall is composed of 2x2 plasterboard boards,12,5 mm thick, installed on a steel frame construction.
To fulfill the classification it is NOT mandatory to use the mineral wool inside the wall (mineral wool with density up to 100 kg/m^3 can be used). The minimum thickness of the wall is 100 mm.

EI 90 (ve i↔o)S
The wall is made out of type F (EN520) gypsum plaster boards.

EI 60 (ve i↔o)S
The wall is made out of type A (EN520) gypsum plaster boards.

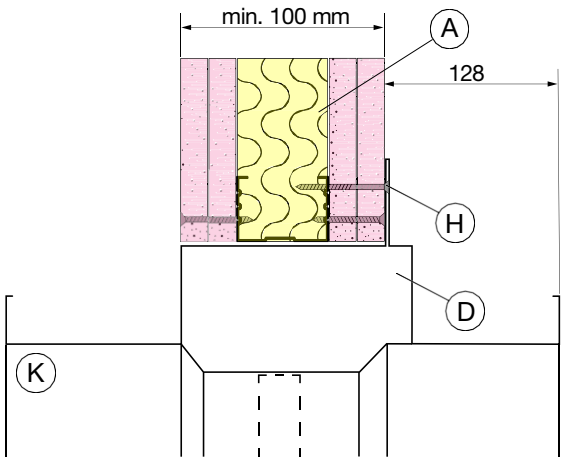

Flexible wall installation

A Flexible wall
H Drywall screws 4 pcs, 4,8x60 mm
D Applique installation kit
K Fire damper casing

Classification

(type F wall) EI 90 (ve i↔o)S
(type A wall) EI 60 (ve i↔o)S

* The images shown are for illustration purposes only and may not be an exact representation of the product.

Possible damper orientations

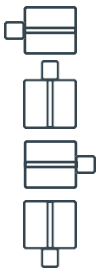

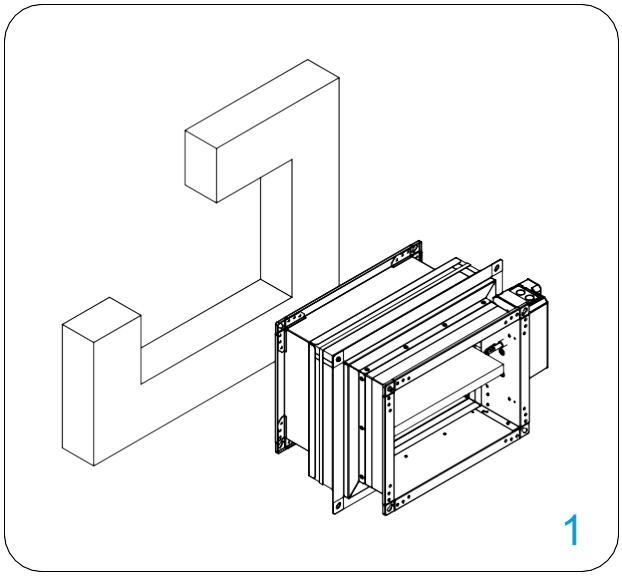

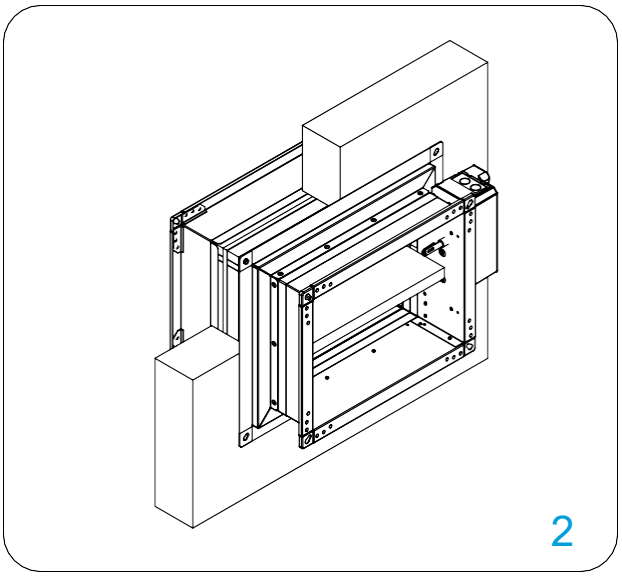

Damper blade must be closed during installation!

1. Recommended wall opening for the fire damper.
   mounting hole: bxh = (B+ 70...80mm) x (H + 70...80mm)

2. Insert fire damper into wall and fasten with drywall screws (4 pcs, 4,8x60 mm).

Test the operation of the damper blade!

* The images shown are for illustration purposes only and may not be an exact representation of the product.

Rigid wall installation
MF1/MF2 installation frame

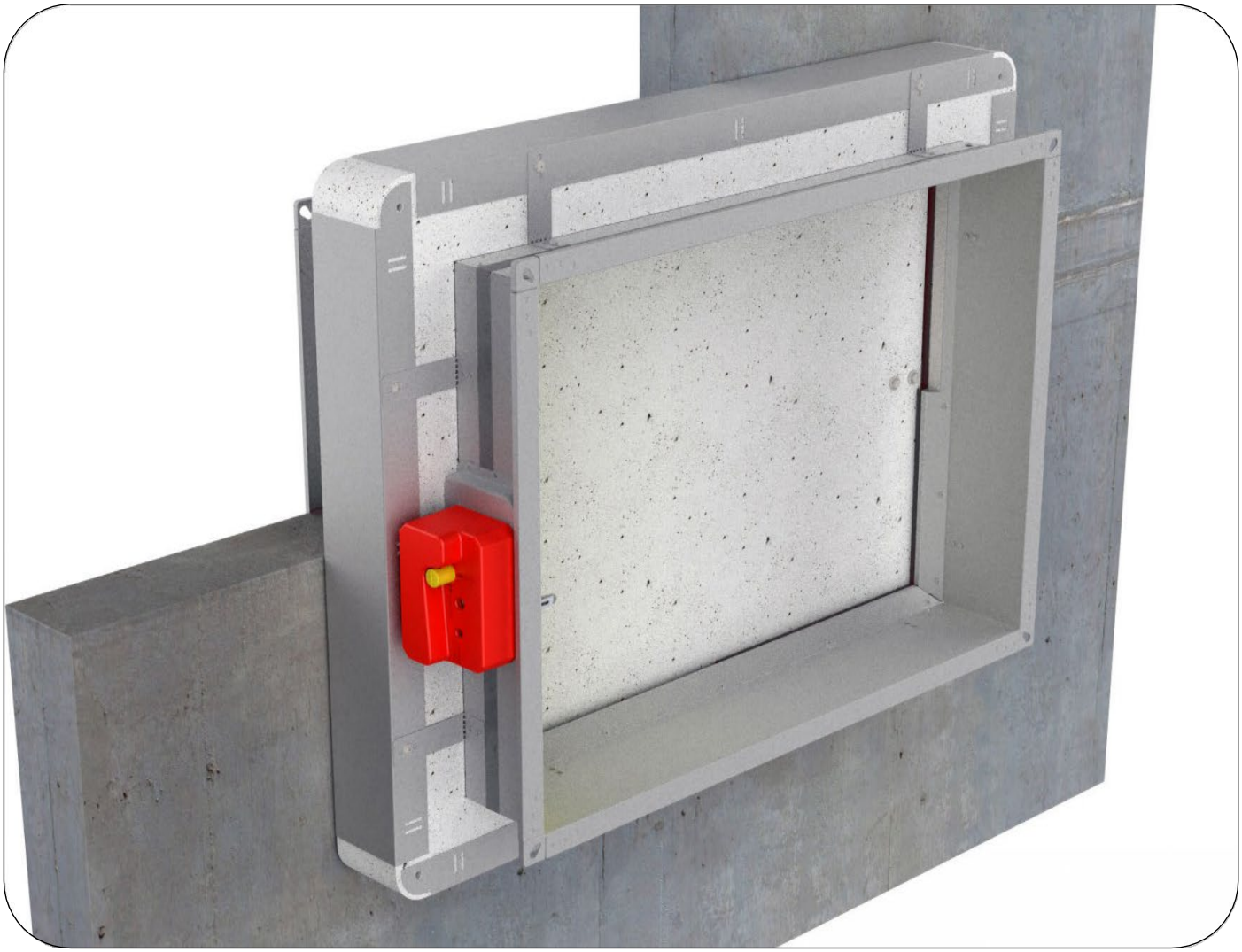

The wall is composed of concrete blocks (minimum density of 450 kg/m^3) or reinforced concrete (minimum density of 2200 kg/m^3) and with a minimum thickness of 100 mm.

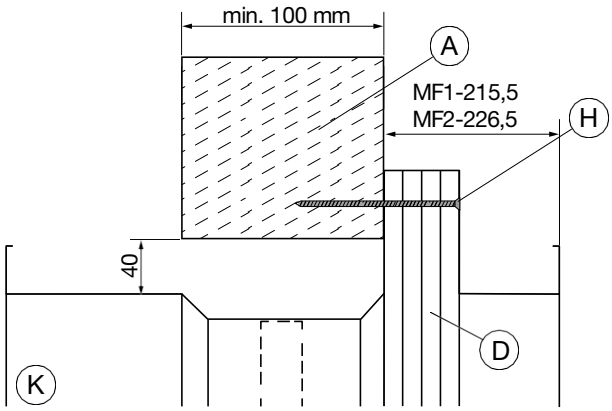

Rigid wall installation

A Rigid wall
D MF installation kit
H Masonry screw 6x140mm, (FD25 4 pcs. FD40 12 pcs.)
K Fire damper casing

Classification

MF1: EI 60 (ve i↔o)S
MF2: EI 90 (ve i↔o)S

* The images shown are for illustration purposes only and may not be an exact representation of the product.

Possible damper orientations

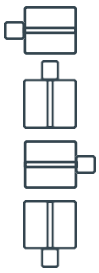

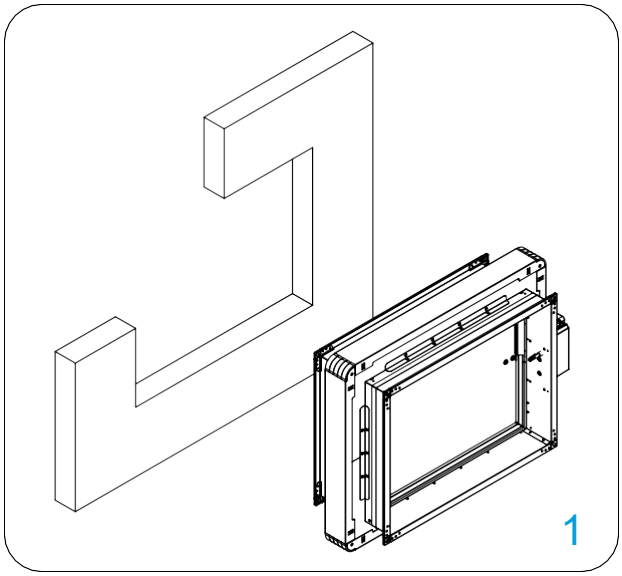

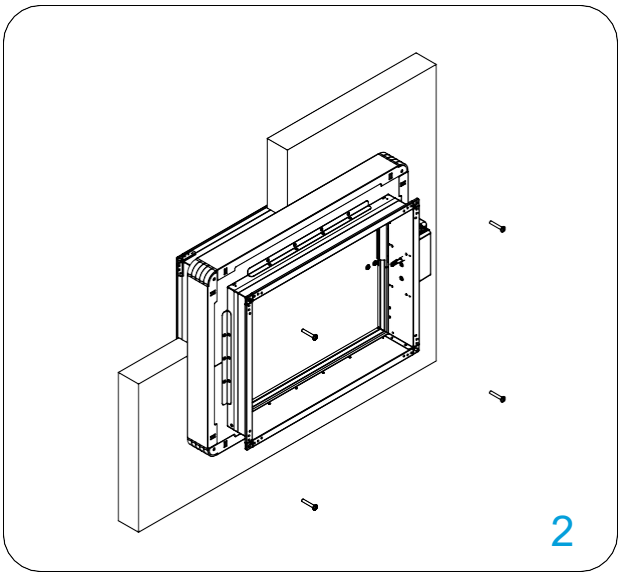

Damper blade must be closed during installation!

1. Recommended wall opening for the fire damper.
   mounting hole: bxh = (B+ 70...80mm) x (H + 70...80mm)

2. Insert fire damper into wall and fasten with masonry screws.

MF1 - 4 pcs, 6x140 mm,
MF2 - 12 pcs, 6x140 mm

The surface must be level. Any unevenness must be leveled with suitable filler.

Test the operation of the damper blade!

* The images shown are for illustration purposes only and may not be an exact representation of the product.

Gypsum blocks wall installation
MF1/MF2 installation frame

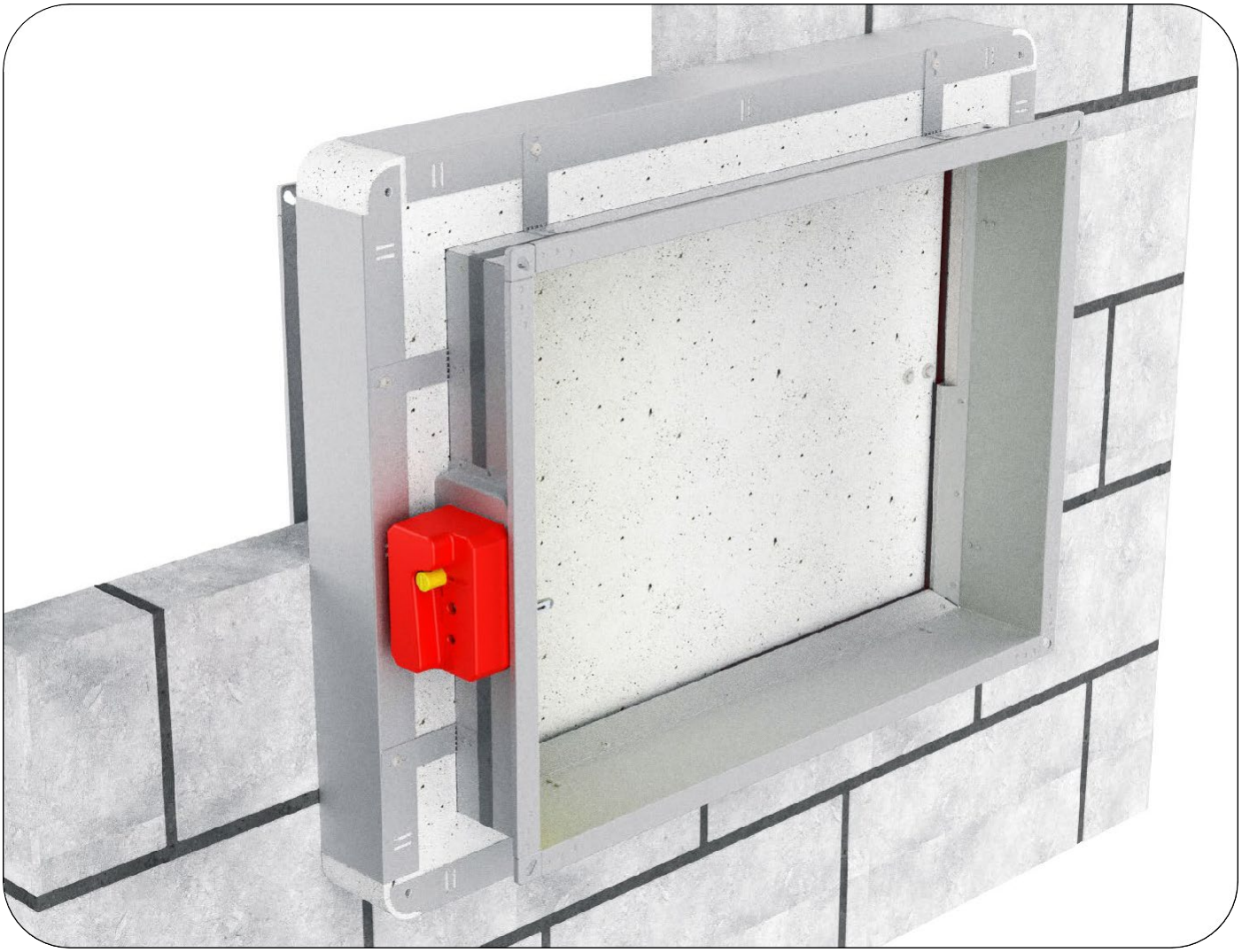

The wall is composed of gypsum blocks (minimum density of 995 kg/m^3), and with minimum thickness of 70 mm.

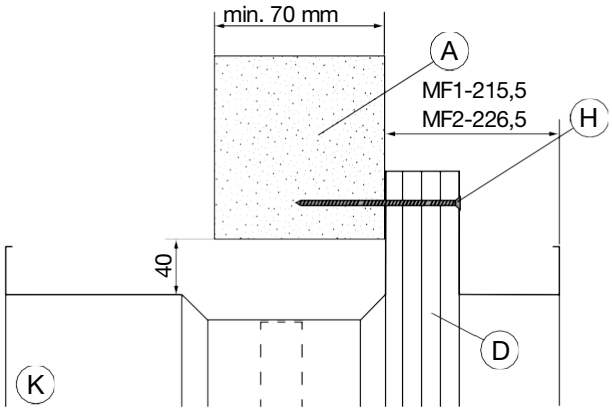

Gypsum blocks wall installation

A Gypsum wall
D MF installation kit
H Masonry screw 6x140mm, (FD25 4 pcs. FD40 12 pcs.)
K Fire damper casing

Classification

MF1/FD25: EI 60 (ve i↔o)S
MF2: EI 90 (ve i↔o)S

* The images shown are for illustration purposes only and may not be an exact representation of the product.

Possible damper orientations

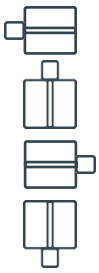

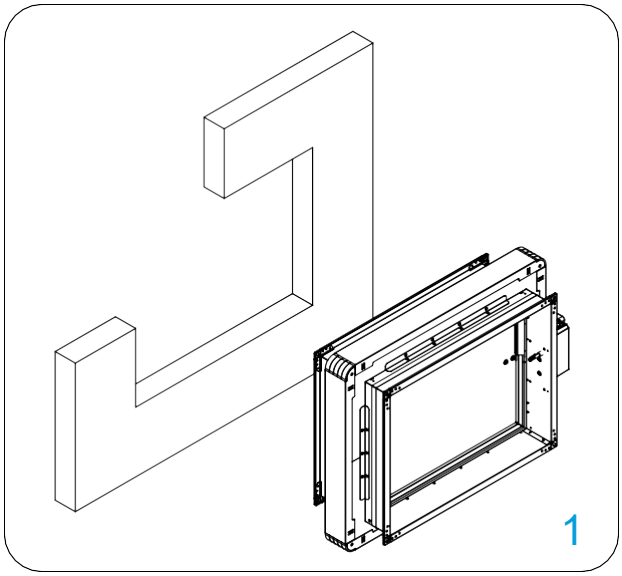

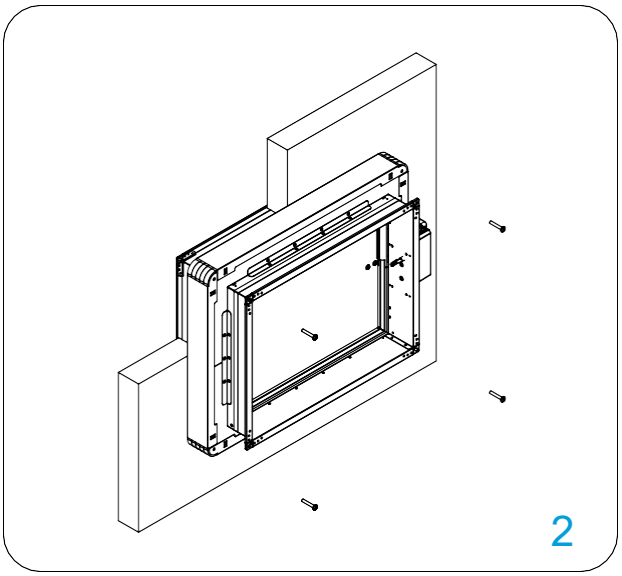

Damper blade must be closed during installation!

1. Recommended wall opening for the fire damper.
   mounting hole: bxh = (B+ 70...80mm) x (H + 70...80mm)

2. Insert fire damper into wall and fasten with masonry screws.

MF1 - 4 pcs, 6x140 mm,
MF2 - 12 pcs, 6x140 mm

The surface must be level. Any unevenness must be leveled with suitable filler.

Test the operation of the damper blade!

* The images shown are for illustration purposes only and may not be an exact representation of the product.

Flexible wall installation
MF1/MF2 installation frame

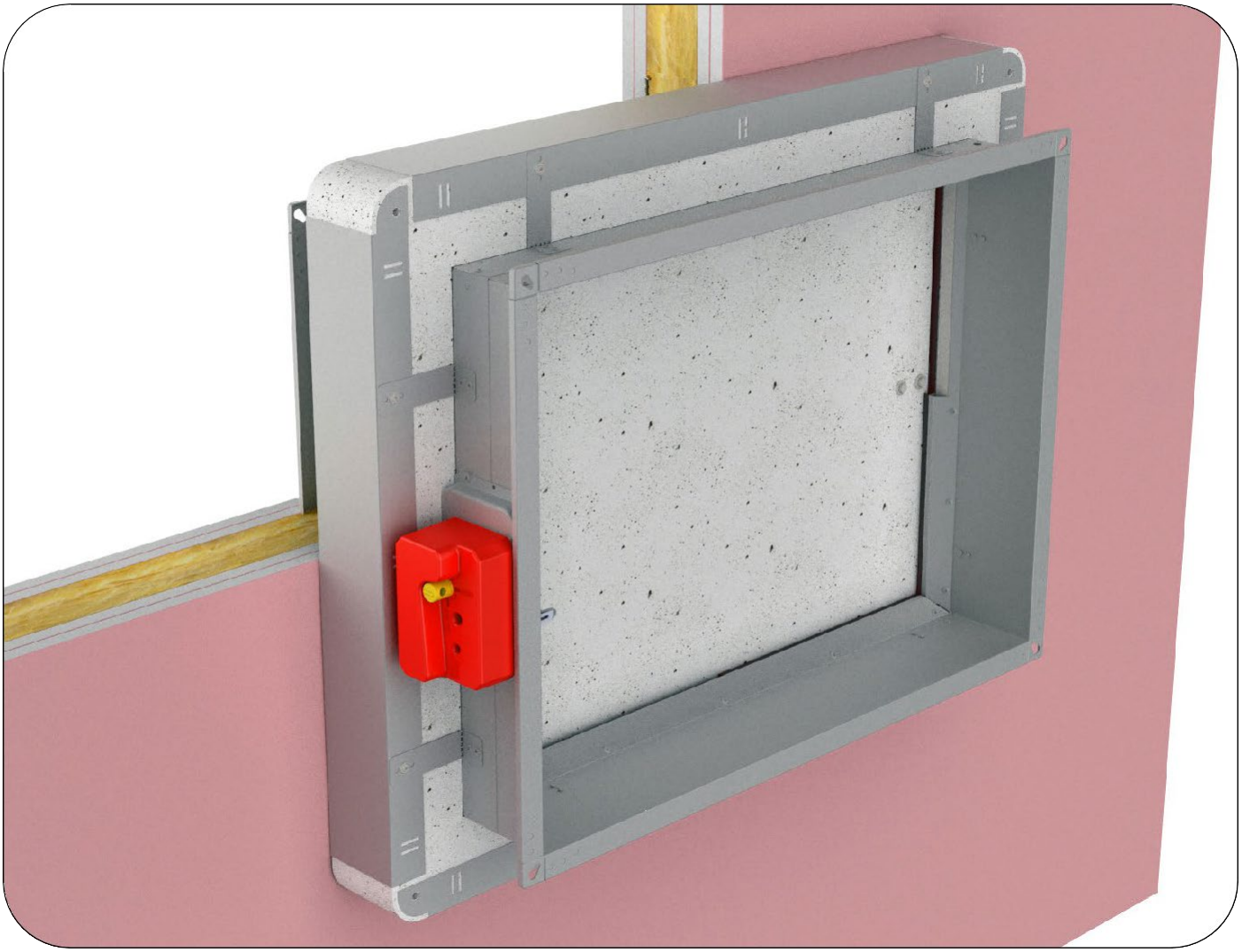

EI 60 (ve i↔o)S)
The wall is made out of type A (EN520) gypsum plaster boards. To fulfill the classification it is NOT mandatory to use the mineral wool inside the wall (mineral wool with density up to 60 kg/m^3 can be used). The minimum thickness of the wall is 100 mm.
EI 90 (ve i↔o)S)
The wall is made out of type F (EN520) gypsum plaster boards, installed on a steel frame construction.
To fulfill the classification it is NOT mandatory to use the mineral wool inside the wall (mineral wool with density up to 100 kg/m^3 can be used). The minimum thickness of the wall is 100 mm.

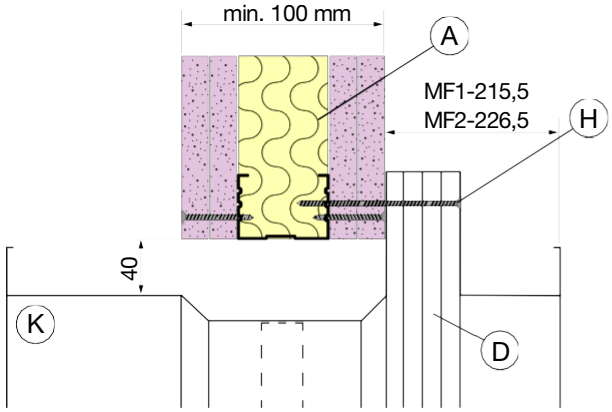

Flexible wall installation

A Flexible wall
D MF installation kit
H Drywall screws 6x140mm, (FD25 4 pcs. FD40 12 pcs.)
K Fire damper casing

Classification

MF1/FD25 (type A wall): EI 60 (ve i↔o)S
MF2/FD40 (type A wall): EI 60 (ve i↔o)S
MF2/FD40 (type F wall): EI 90 (ve i↔o)S

* The images shown are for illustration purposes only and may not be an exact representation of the product.

Possible damper orientations

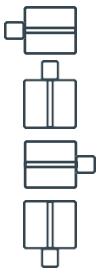

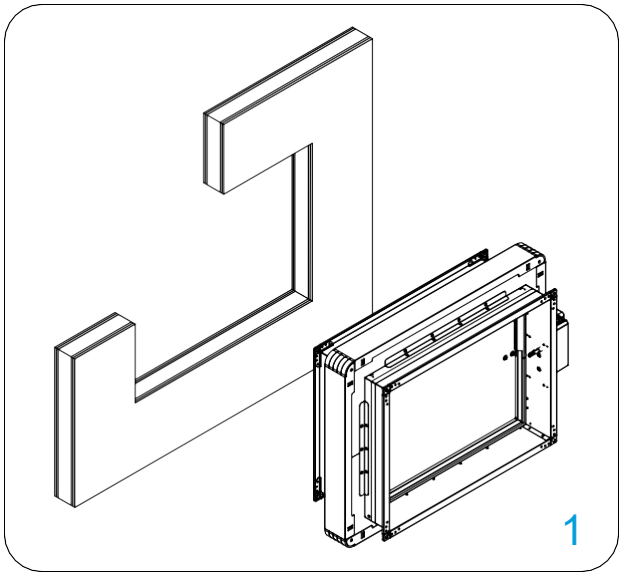

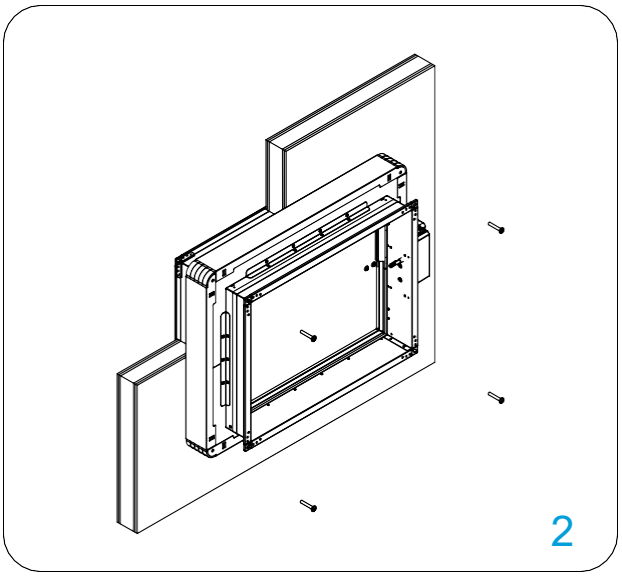

Damper blade must be closed during installation!

1. Build the subframe according to the drawing, see page 20. Recommended wall opening for the fire damper mounting hole: bxh = (B+ 70...80mm) x (H + 70...80mm)

2. Insert fire damper into wall and fasten with drywall screws.

MF1 - 4 pcs, 6x140 mm,
MF2 - 12 pcs, 6x140 mm

Test the operation of the damper blade!

* The images shown are for illustration purposes only and may not be an exact representation of the product.

Rigid floor/ceiling installation
MF1/MF2 installation frame

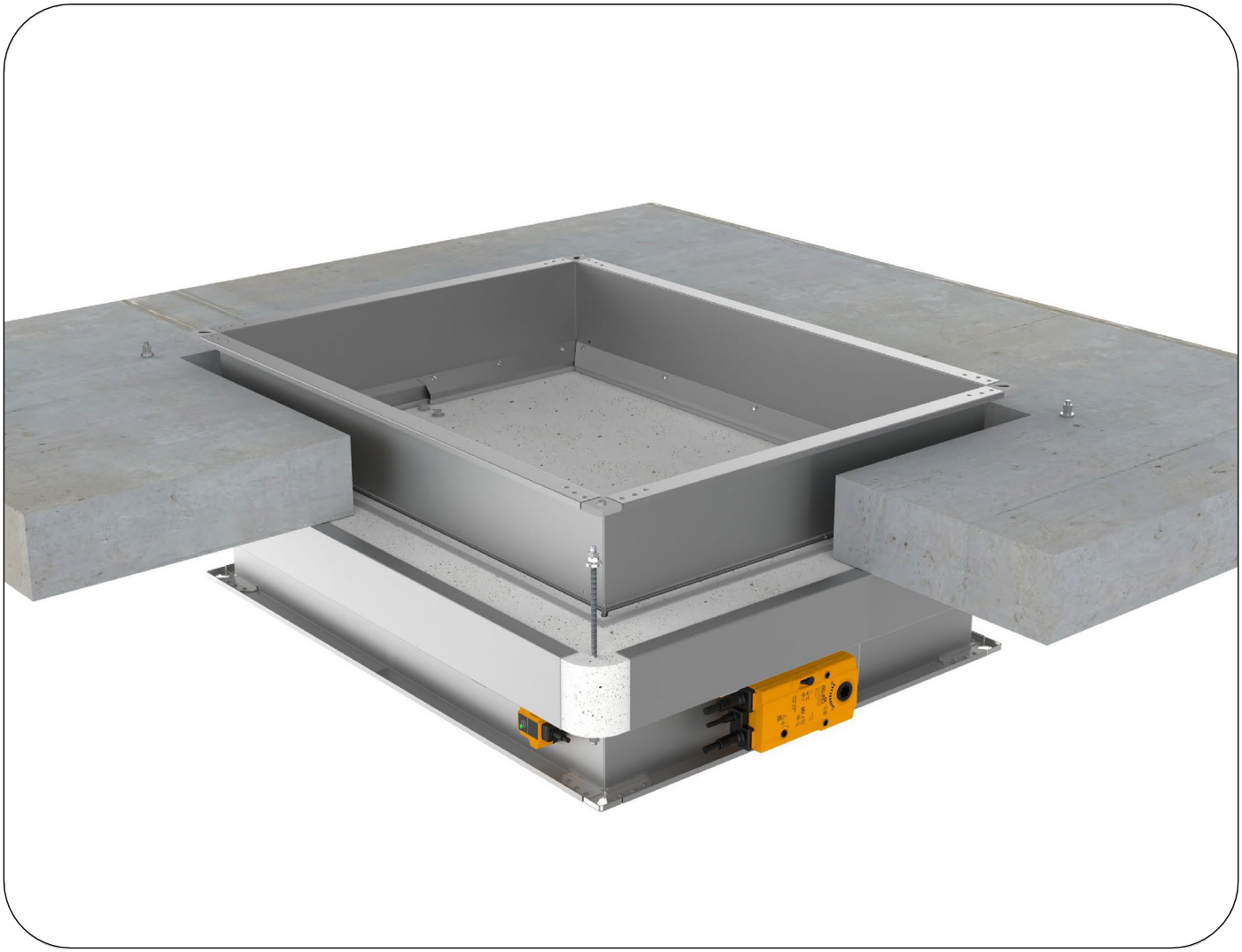

The floor/ceiling is composed of concrete blocks (minimum density of 450 kg/m^3) or reinforced concrete (minimum density of 2200 kg/m^3) and with a minimum thickness of 100 mm.

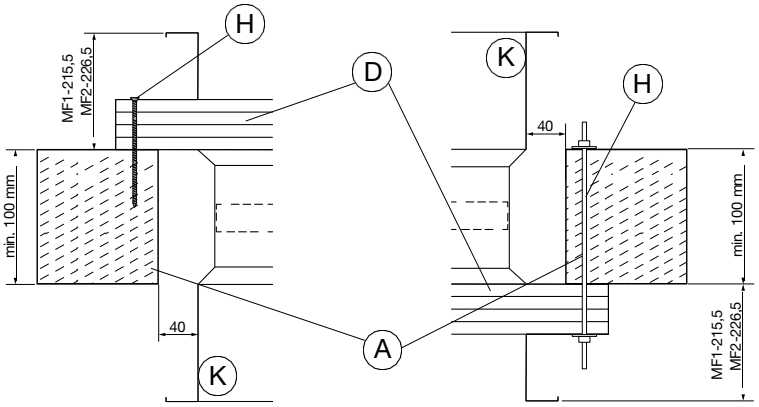

Floor/ceiling installation
Actuator down

A Rigid floor/ceiling
D MF installation kit
H Floor Masonry screw 6x140mm,
(MF1 4 pcs. MF2 12 pcs.)
Ceiling Threaded rod M8
K Fire damper casing

Classification

MF1/FD25: EI 120 (ho i↔o)S
MF2/FD40: EI 90 (ho i↔o)S

* The images shown are for illustration purposes only and may not be an exact representation of the product.

Possible damper orientations

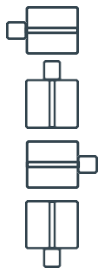

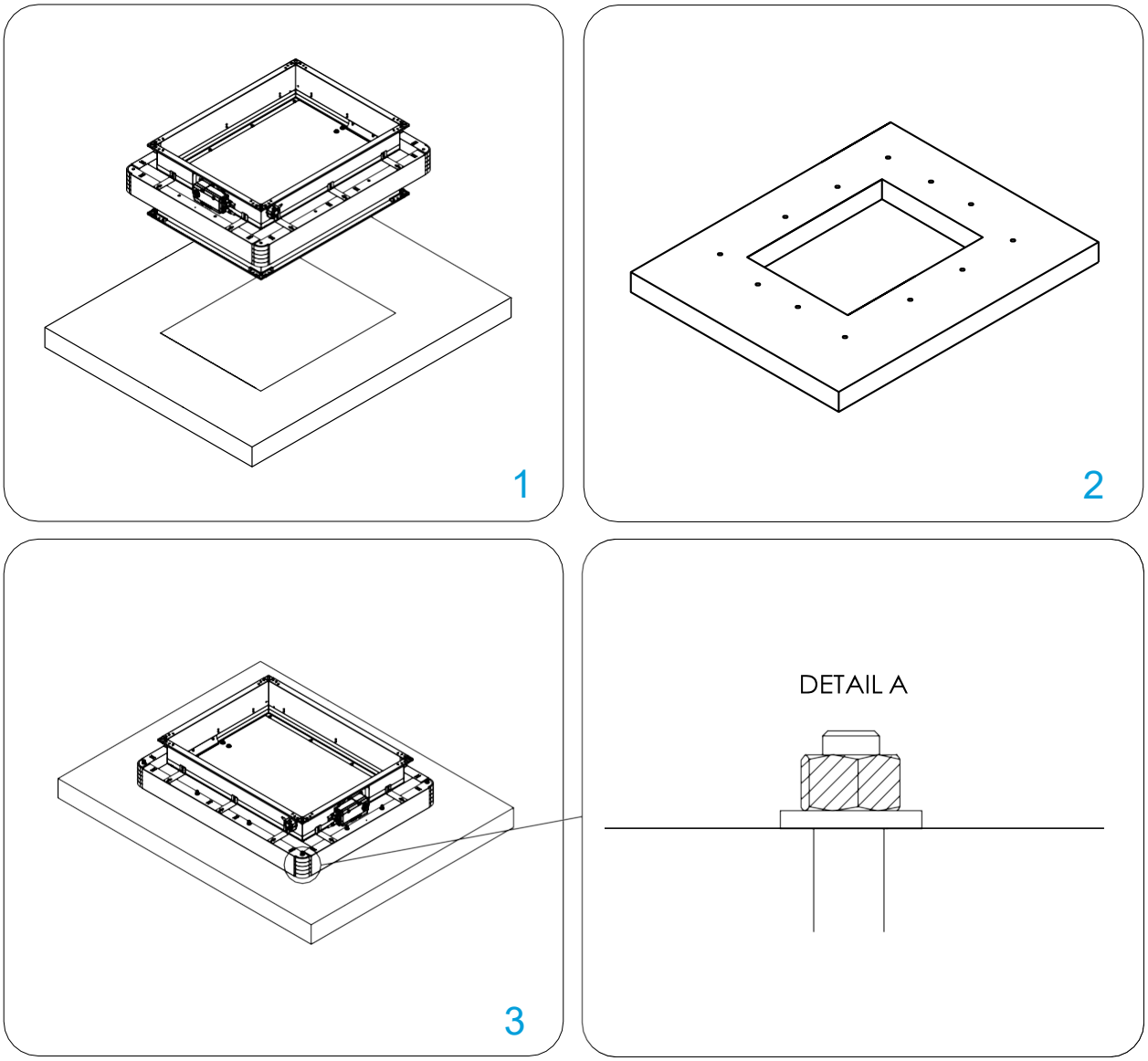

Damper blade must be closed during installation!

1. Recommended opening for the fire damper installation is B (H) + 70...80 mm. Insert the fire damper into the opening and mark the places for drilling holes.

2. Remove the fire damper and drill the marked places (8 mm).

3. Mount 4/12 sets of pre-cut threaded rods, washer, nut and counternut on one side. Place pre-assembled threaded rods in holes in floor/ceiling, and place the damper in the opening. Tighten the tightening sets from oposite side with washer, nut and counternut.

Test the operation of the damper blade!

* The images shown are for illustration purposes only and may not be an exact representation of the product.

Installation remote from flexible/rigid wall (Isover)

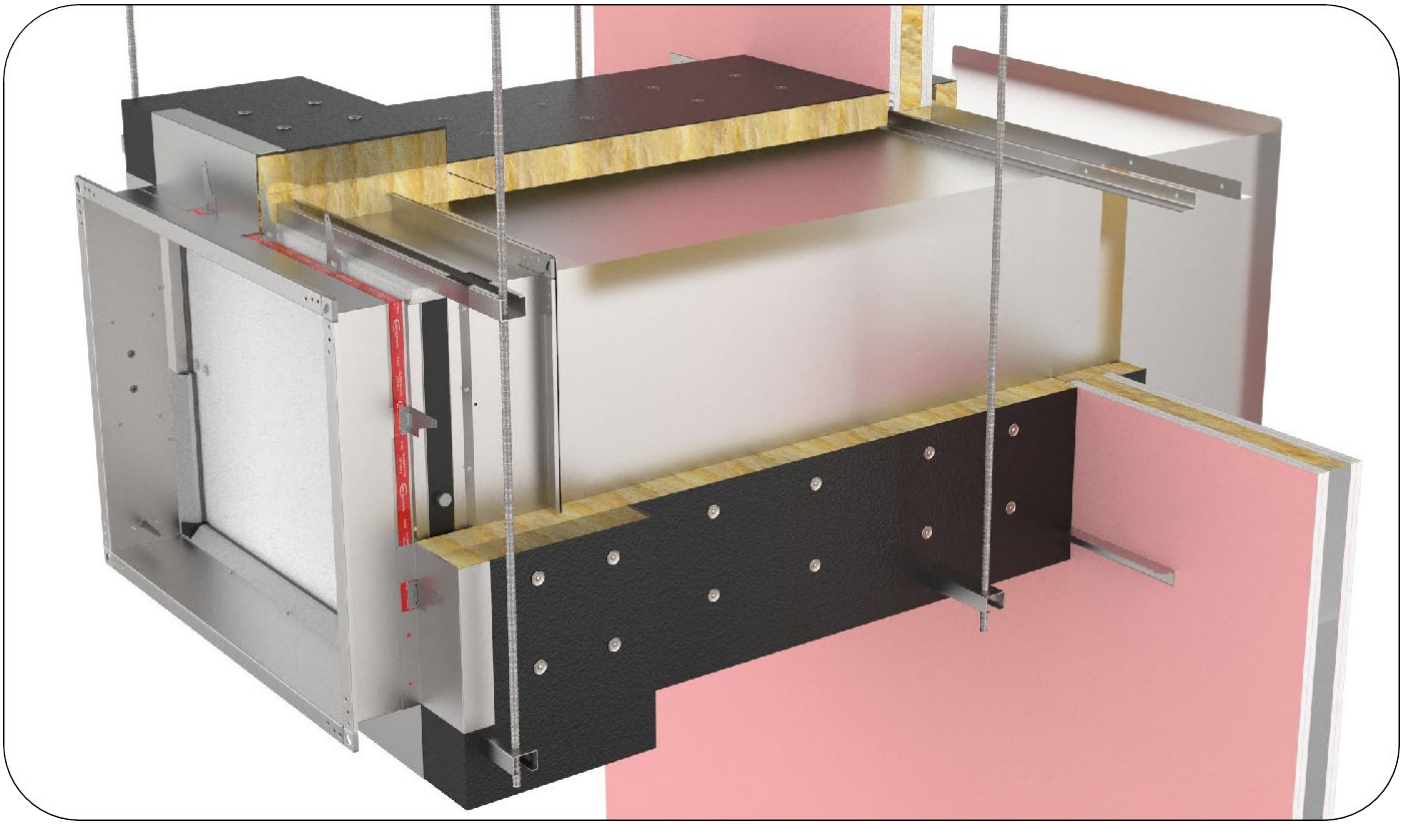

Flexible wall: The wall is composed of 2x2 plasterboard boards,12.5 mm thick, installed on a steel construction. To fulfill the classification it is NOT mandatory to use the mineral wool inside the wall (mineral wool with density up to 115 kg/m^3 can be used).
Rigid wall: The wall is composed of concrete blocks (minimum density of 450 kg/m^3) or reinforced concrete (minimum density of 2200 kg/m^3) and with a minimum thickness of 100 mm.
Maximal dimension for installation 800 x 600!

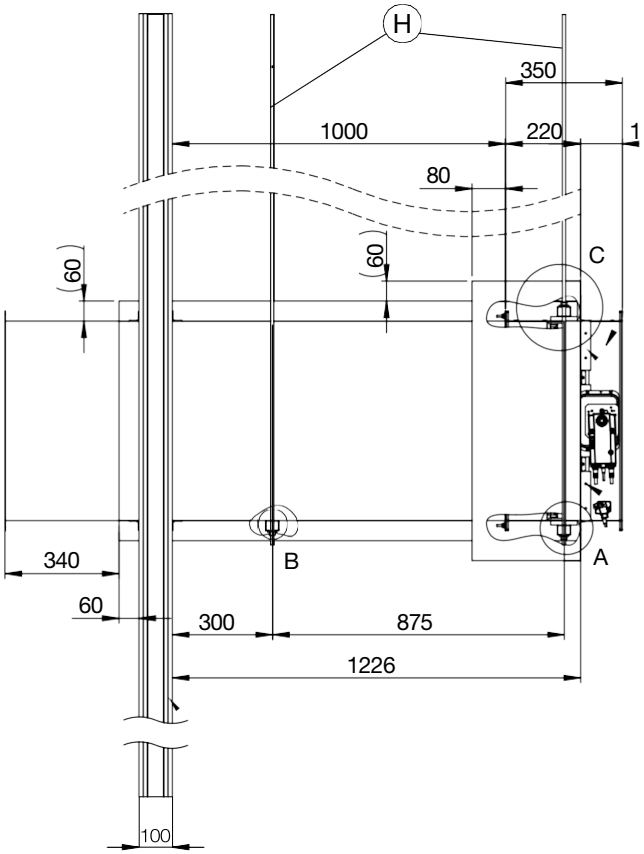

Installation remote from wall with Isover

L MWC kit
H Threaded rod M10

Classification

FD25: EI 60 (ve i↔o)S
FD40: EI 60 (ve i↔o)S

FD 25 Wool A-60+60 mm B 60 mm
FD 40 Wool A-80+30 mm B 80 mm

* The images shown are for illustration purposes only and may not be an exact representation of the product.

Possible damper orientations

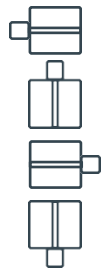

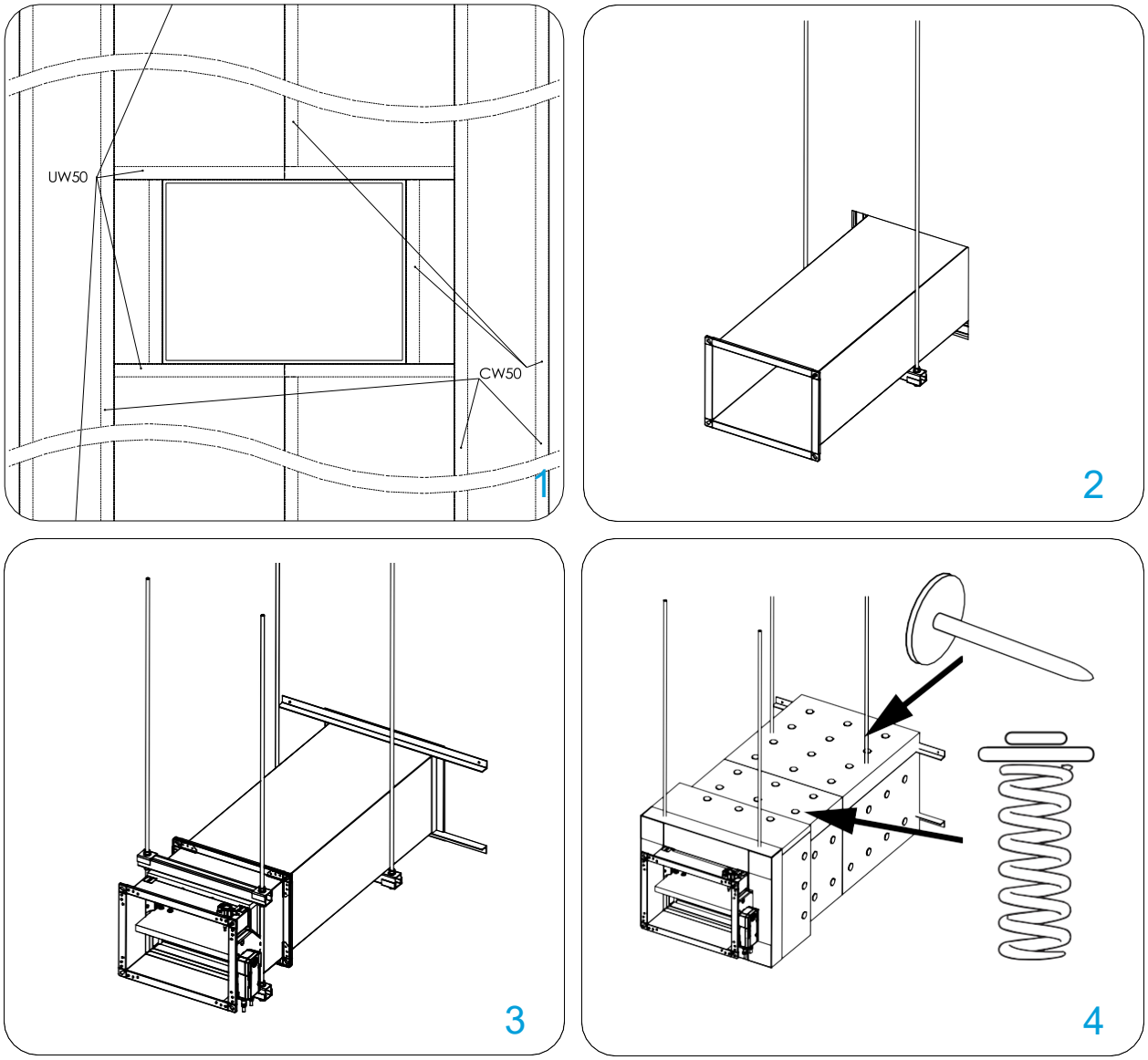

Damper blade must be closed during installation!

1. Place the damper in an opening (B + 80) x (H + 80). Place ventilation duct trough wall. Distance between suspensions is max. 800 mm (thickness of threaded rod for suspension should be M10 (FDC25) or M12 (FDC40).

2. Install fire damper and secure it to ventilation duct. Space between duct and wall should be filled with (Isover U protect Slab), the same material as the ones that is used for insulation of the duct mineral wool. Additionally, paint wool with Isover BSF in thickness of 1 mm.

3. Close installation with L profiles 30x30x3 mm. Additionally fix profiles to duct with self-tapping screws, and screw them to wall with 4,5x50 screws with 200 mm distance between them. On connection wool-wall apply glue Isover BSK in thickness of 2 mm. Repeat the same procedure on the other side.

4. Secure the wool with welding nails. Nails are placed 60 mm from the end of the plate and 150 mm between each other. Isover Fire Protect Screw screws are additionally used on the corner on every
150 mm. Additionally place steel protection on place where insulation on damper ends. Place the wool on ventilation duct in length of 80 mm and secure it with welding nails. Repeat the process on the other side of the wall.

Test the operation of the damper blade!

*Use MWC accessories kit for installation!

* The images shown are for illustration purposes only and may not be an exact representation of the product.

Installation remote from the rigid wall (Promat K84)

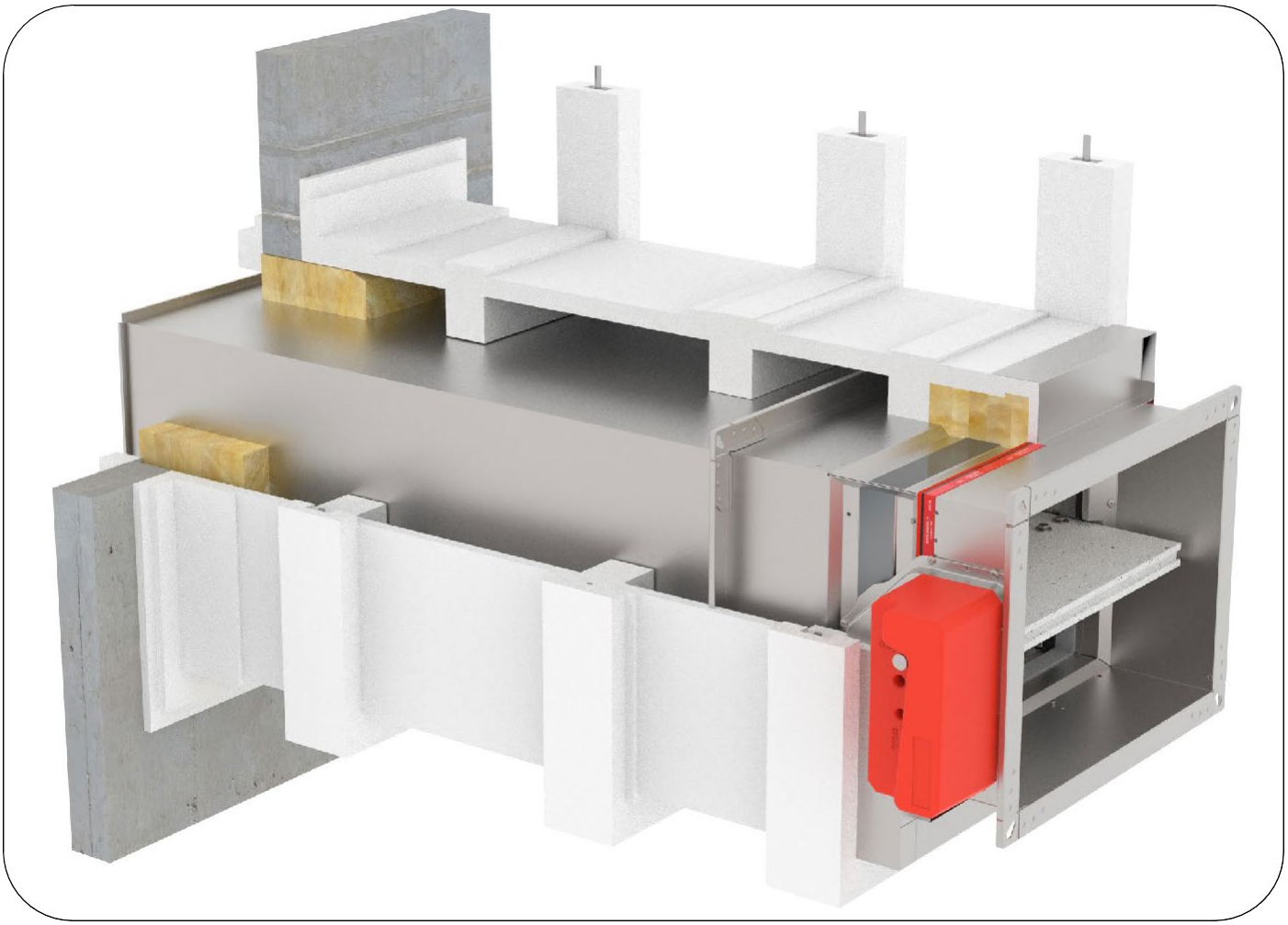

The wall is composed of concrete blocks (minimumdensity of 450 kg/m^3) or reinforced concrete (minimum density of 2200 kg/m^3) and with a minimum thickness of 100 mm.
Installation only possible with FD40, max. dimension 1500 x 800!

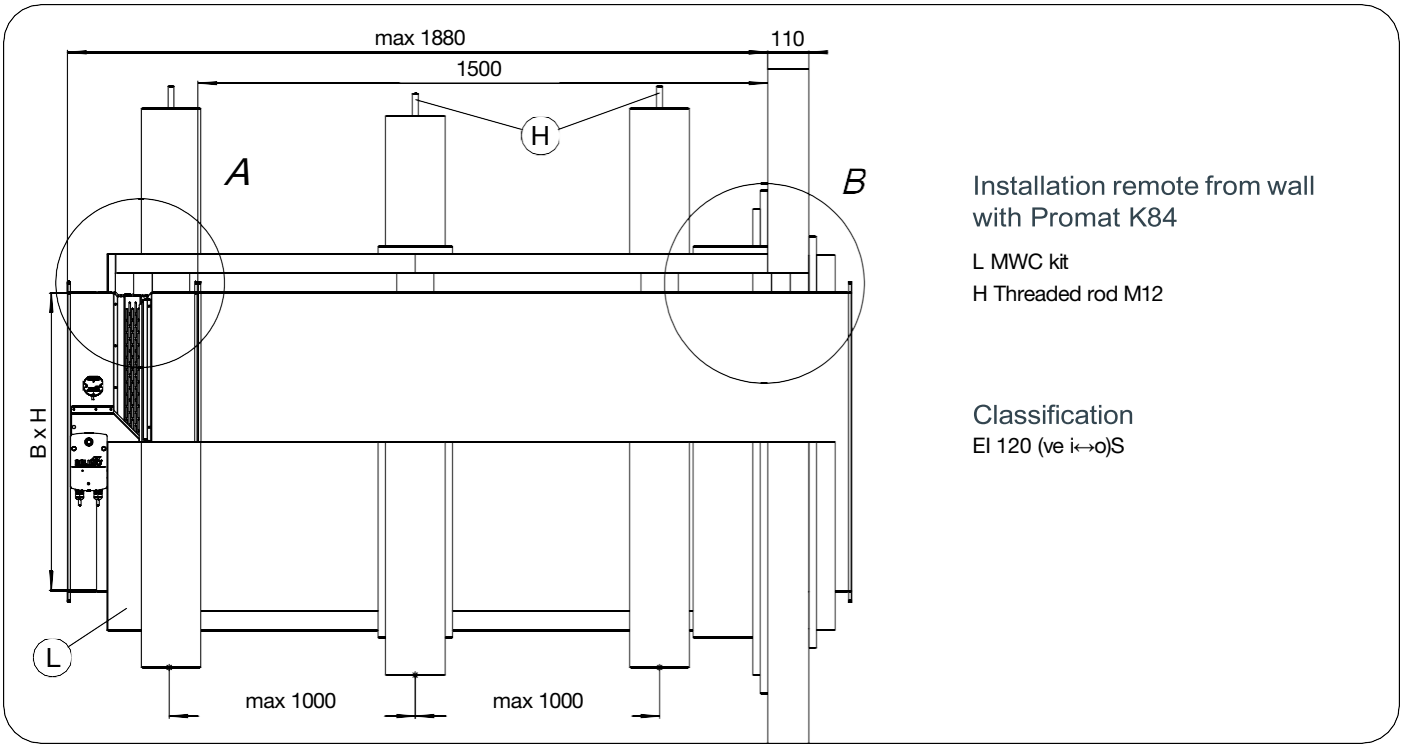

Installation remote from wall with Promat K84

L MWC kit

H Threaded rod M12

Classification

EI 120 (ve i↔o)S

* The images shown are for illustration purposes only and may not be an exact representation of the product.

DOP WALLS MATERIALS

Possible damper orientations

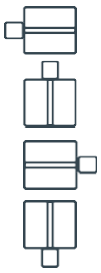

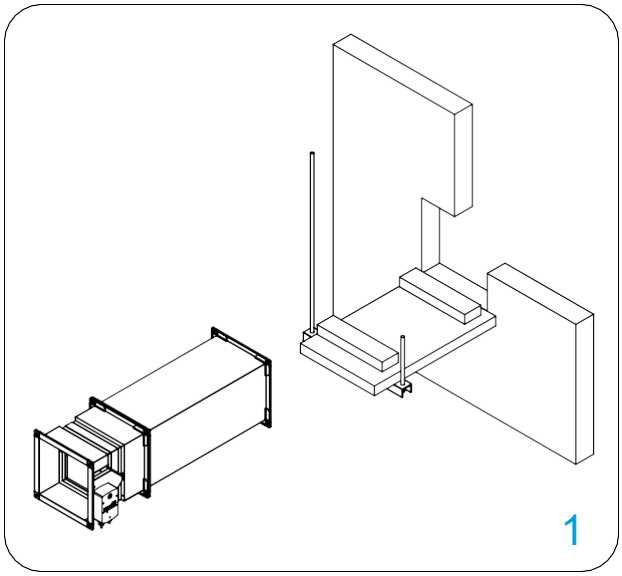

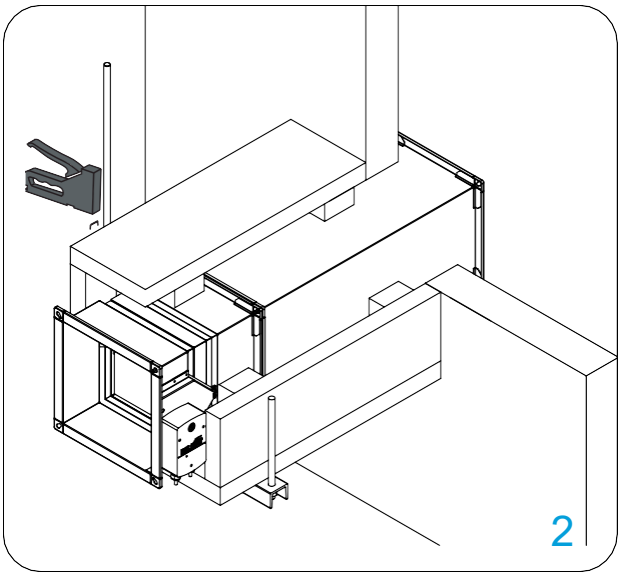

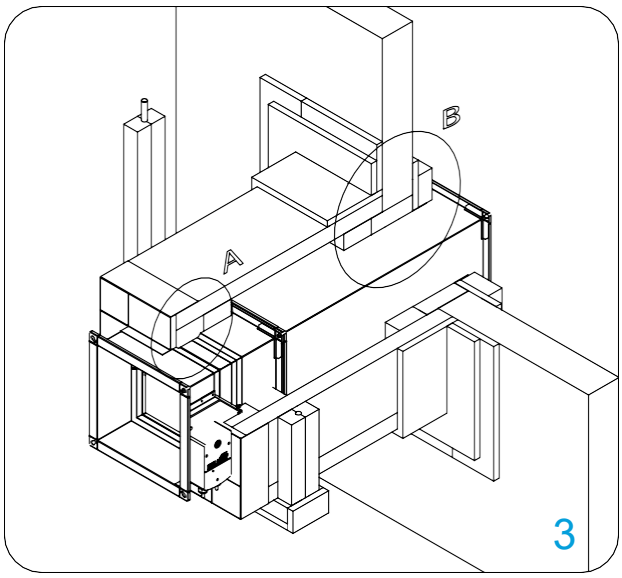

A

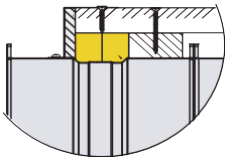

B

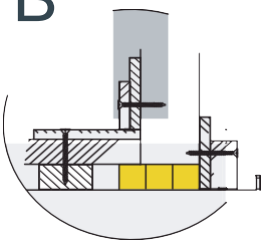

Damper blade must be closed during installation!

1. Recommended wall opening for the fire damper installation is B (H) + 100 mm. Place fire damper and duct on pre-cut calcium silicate 52 mm (Promat L500), 100 mm wide supports (max. every 1000 mm) from same material need to be used to support the duct as well as the damper. Maximal distance from wall 1880 mm.

2. Fit the duct and the damper through the wall, and cover them with 52 mm calcium silicate (Promat L500). Board corner joints must be glued with glue PROMAT K84 and connected with staples every 100 mm.

3. The gap between the damper and the wall must be filled with mineral wool (density 140 kg/m^3 or more). Close the mineral wool with Promatect H plates 20 mm thick. Duct and damper supporting brackets have to be insulated with 52 and 20 mm calcium silicate boards (Promatect H and L500).

*Use MWC accessories kit for installation!

Test the operation of the damper blade!

* The images shown are for illustration purposes only and may not be an exact representation of the product.

Installation remote from the rigid wall (Promat Promastop LS35)

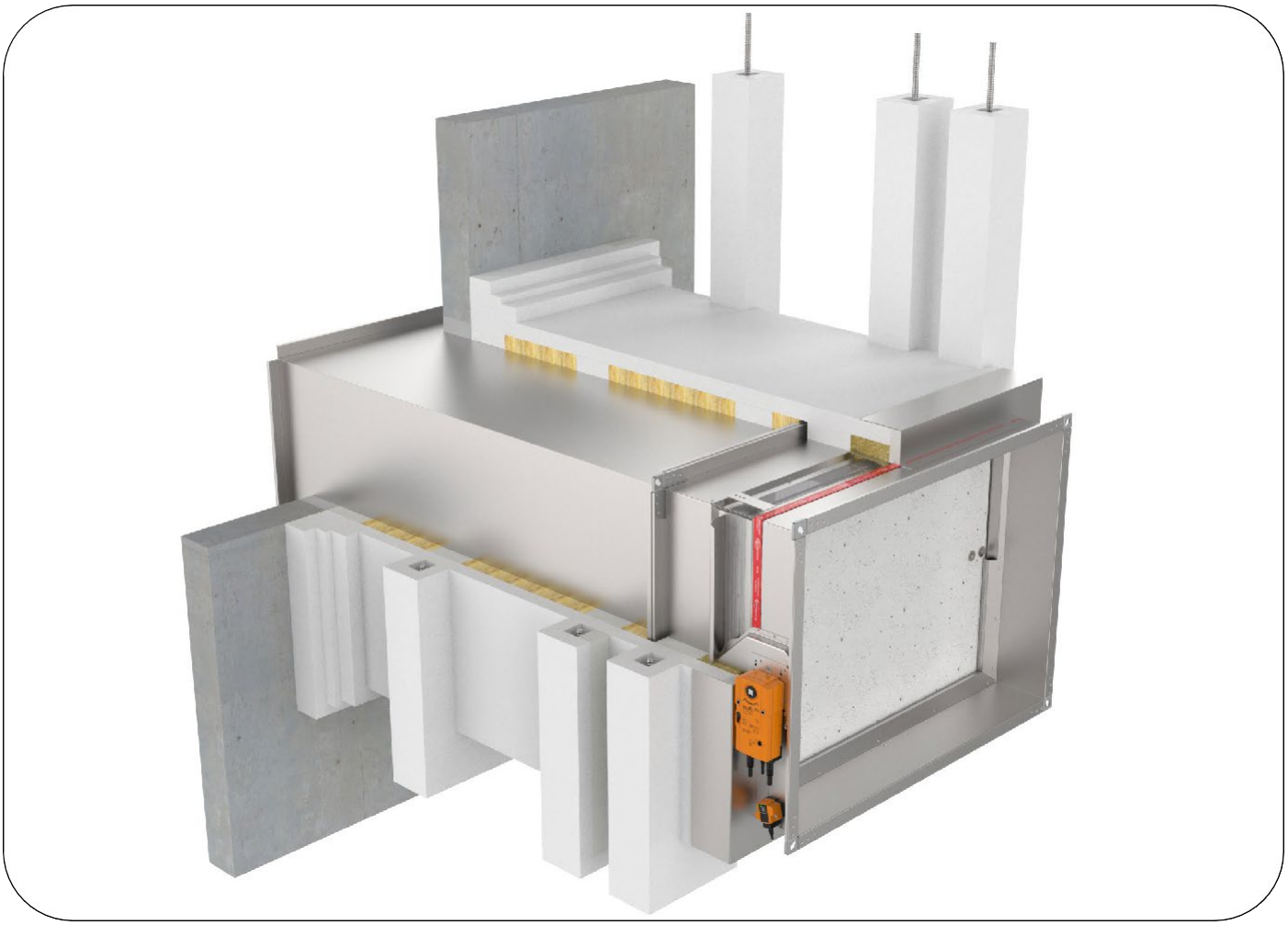

The wall is composed of concrete blocks (minimumdensity of 450 kg/m^3) or reinforced concrete (minimum density of 2200 kg/m^3) and with a minimum thickness of 100 mm.

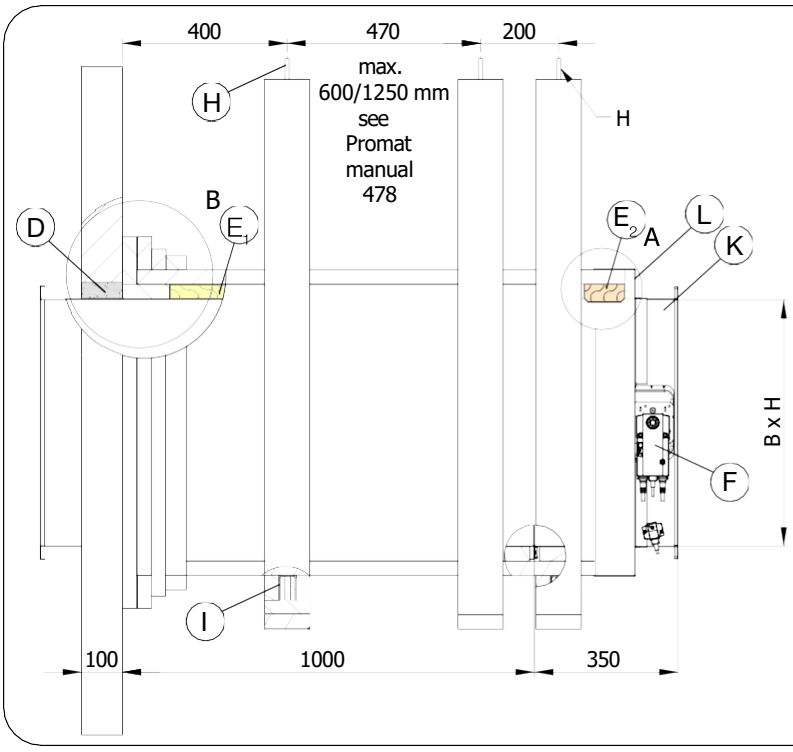

Installation remote from wall with Promat Promastop LS35 boards

L LS35 kit
H Threaded rod M12
D Sealing material - Knauf Perlfix or Promat Filler PRO
E_1 Sealing material mineral wool 40 kg/m^3 of density or higher
E_2 Sealing material mineral wool 140 kg/m^3 of density or higher
F Actuator position
I Profile 41/62x2,5 mm
K Fire damper casing

Classification

EI 90 (ve i↔o)S

* The images shown are for illustration purposes only and may not be an exact representation of the product.

Possible damper orientations

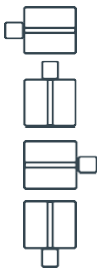

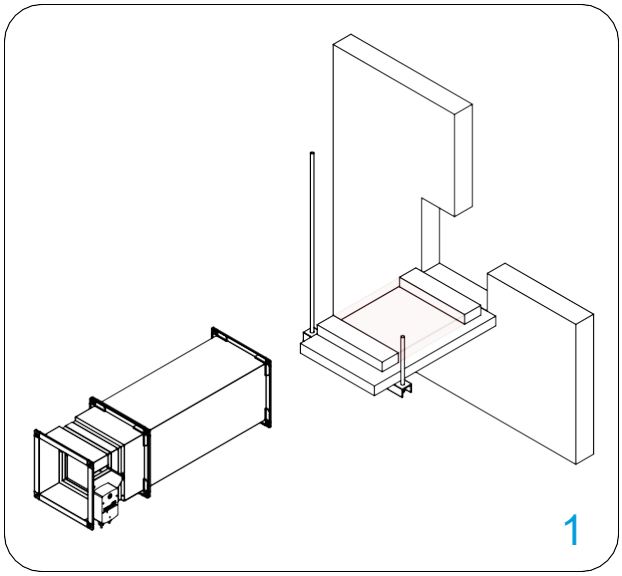

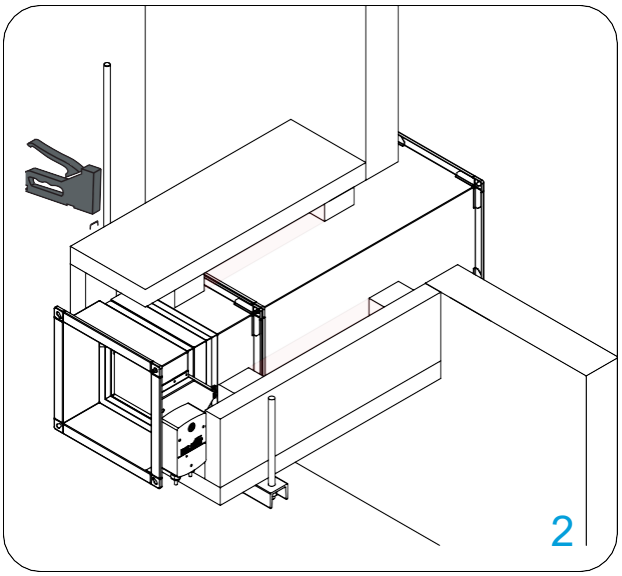

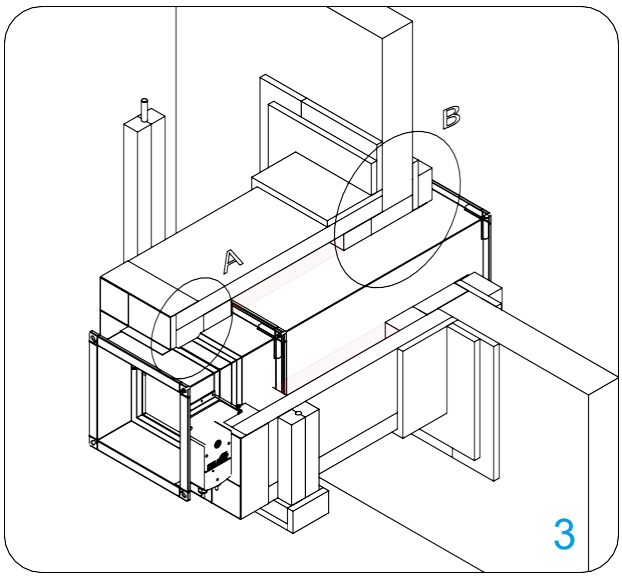

A

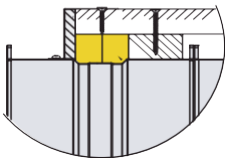

B

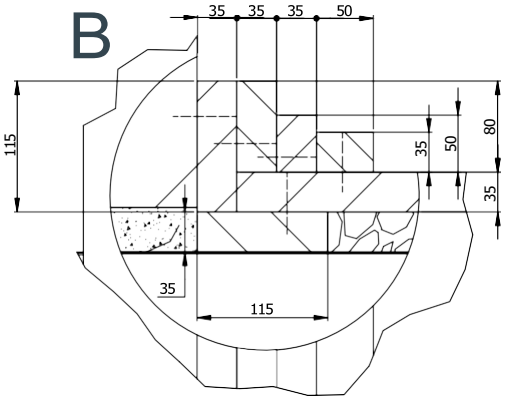

Damper blade must be closed during installation!

1. Recommended wall opening for the fire damper installation is B (H) + 80 mm. Place fire damper and duct on pre-cut calcium silicate 35 mm (Promat LS35), 100 mm wide supports (in area of each hanger) from same material need to be used to support the duct and 110 mm wide supports need to be used for the damper. Mineral wool (40 kg/m3) needs to be inserted between supports.

2. Fit the duct and the damper through the wall and cover them with 35 mm calcium silicate (Promat LS35). Board corner joints must be glued with glue PROMAT K84 and connected with screws 5,0 x (50 – 100 mm) every 200 mm

3. The gap between the damper and the calcium silicate needs to be filled with mineral wool (140 kg/m3). The gap between the wall and the duct needs to be filled with Promat Filler PRO or Knauf Perlfix. Wall attachment needs to be done according to Promat manual 478. Close the mineral wool with Promatect H plates 25 mm thick and cover them with galvanized steel sheet 1,0 mm thick. Duct and damper supporting brackets have to be insulated with 35 mm calcium silicate boards – LS35.

*Use LS35 accessories kit for installation!

Test the operation of the damper blade!

* The images shown are for illustration purposes only and may not be an exact representation of the product.

Battery assembly installation 2x1

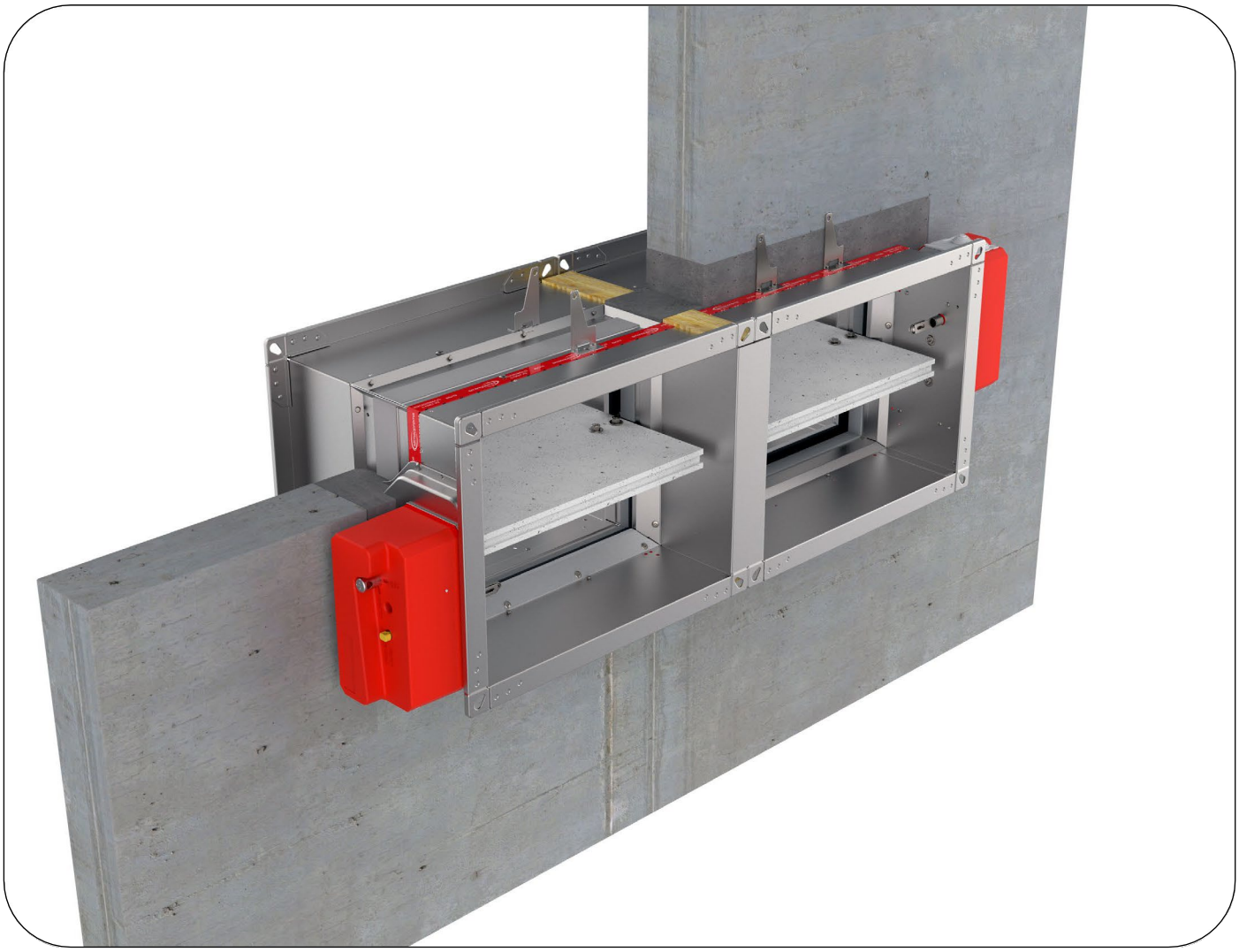

The wall is composed of blocks of aerated concrete (minimum density 550 kg/m^3) and with a minimum thickness of 100 mm.
*For battery installation 2x1 use 2x connecting frame.
Installation only possible with FD40!

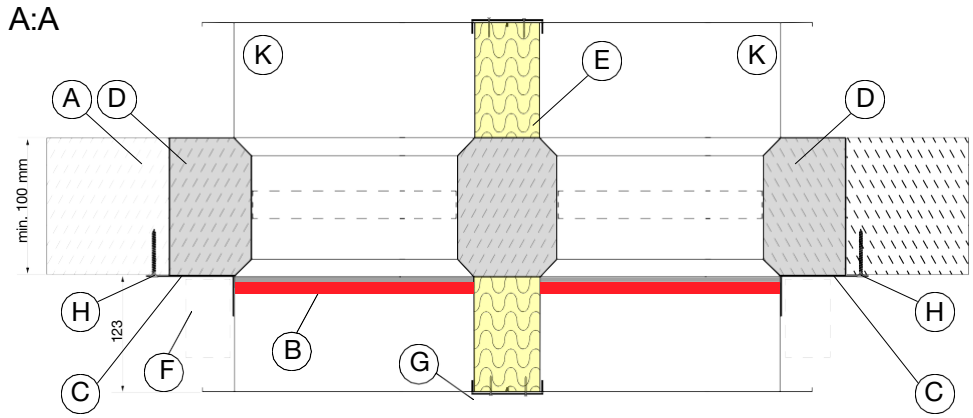

Battery installation 2 x 1 Rigid wall

A Rigid wall
B Limit mark
C Fixing bracket with screw hole Ød 6mm, min length 30 mm
D Sealing material mortar/gypsum
E Sealing material mineral wool 100 kg/m^3 of density or higher
F Actuator position
G Connecting frame or CF 100 attached with self-tapping screws every 150 mm
H Masonry screw 6x50 mm
K Fire damper casing

Classification

FD40: EI 120 (ve i↔o)S

* The images shown are for illustration purposes only and may not be an exact representation of the product.

Possible damper orientations

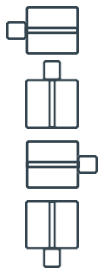

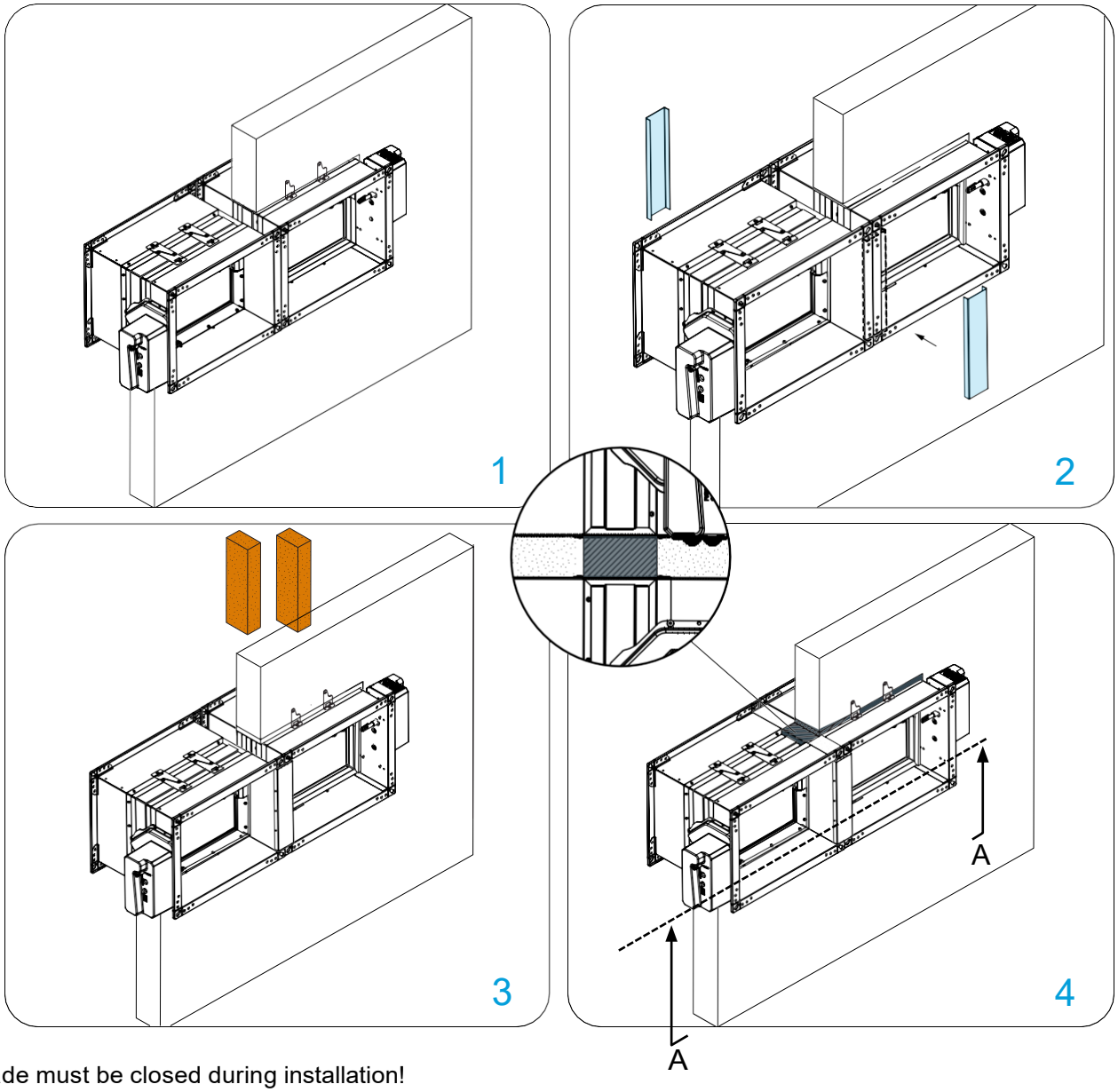

Damper blade must be closed during installation!

1. Create an opening in the wall of dimensions (B - Duct + 80mm x H - Duct + 80mm). Bend the mounting bracket by 90°. Insert the damper into the opening up to the wall boundary mark on the damper.

Connecting frame width:
CF100 - Connecting frame 100 mm

For easier installation, the fire damper can be mounted on the wall. Use approved / suitable screws for this purpose. (The mounting hole has a diameter of 6 mm.)

2. Place the installation kit “CF100” to the dampers on both sides, and attach it using the self-tapping screws every 150 mm.

3. Fill the space between the dampers with mineral wool (100 kg/m^3 of density).

4. Fill the space between the dampers and the wall with mortar.

Test the operation of the damper blade!

* The images shown are for illustration purposes only and may not be an exact representation of the product.

Battery assembly installation 1x2

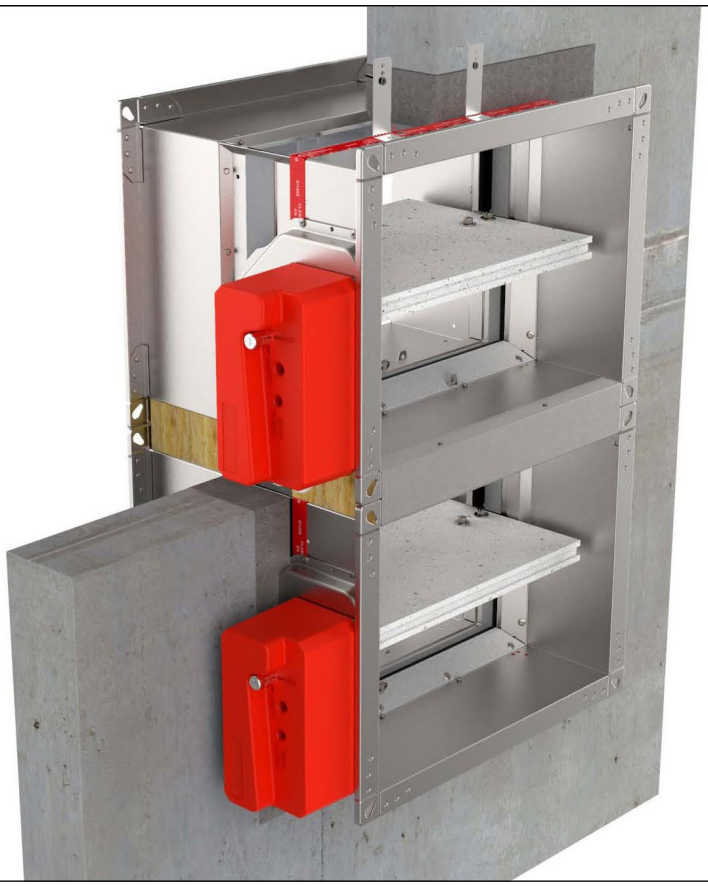

A:A

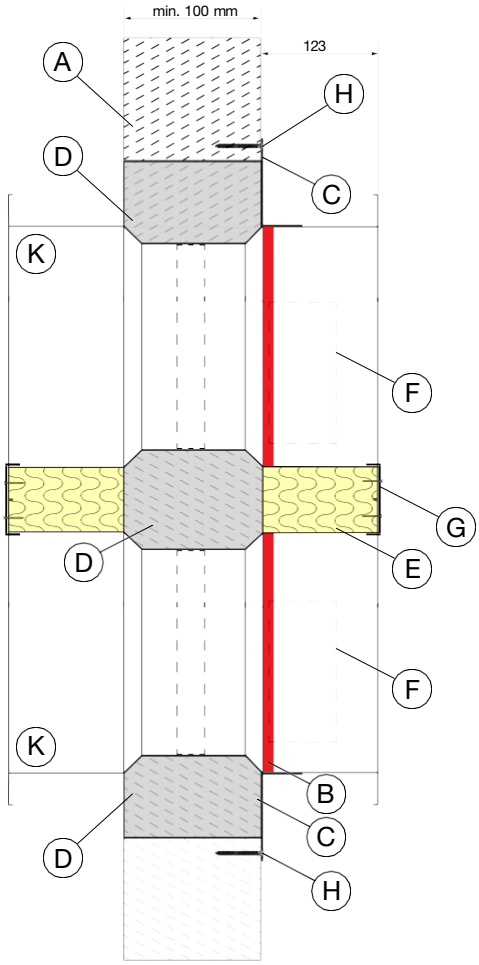

The wall is composed of blocks of aerated concrete (minimum density 550 kg/m^3) and with a minimum thickness of 100 mm.

*For battery installation 1x2 use 2x connecting frame. Installation only possible with FD40!

Battery installation 1 x 2
Rigid wall

A Rigid wall
B Limit mark
C Fixing bracket with screw hole Ød 6mm, min length 30 mm
D Sealing material mortar/gypsum
E Sealing material mineral wool 100 kg/m^3 of density or higher
F Actuator position
G Connecting frame CF 100 attached with self-tapping screws every 150 mm
H Masonry screw 6x50 mm
K Fire damper casing

Classification

FD40: EI 120 (ve i↔o)S

* The images shown are for illustration purposes only and may not be an exact representation of the product.

Possible damper orientations

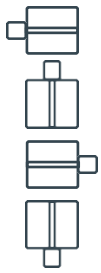

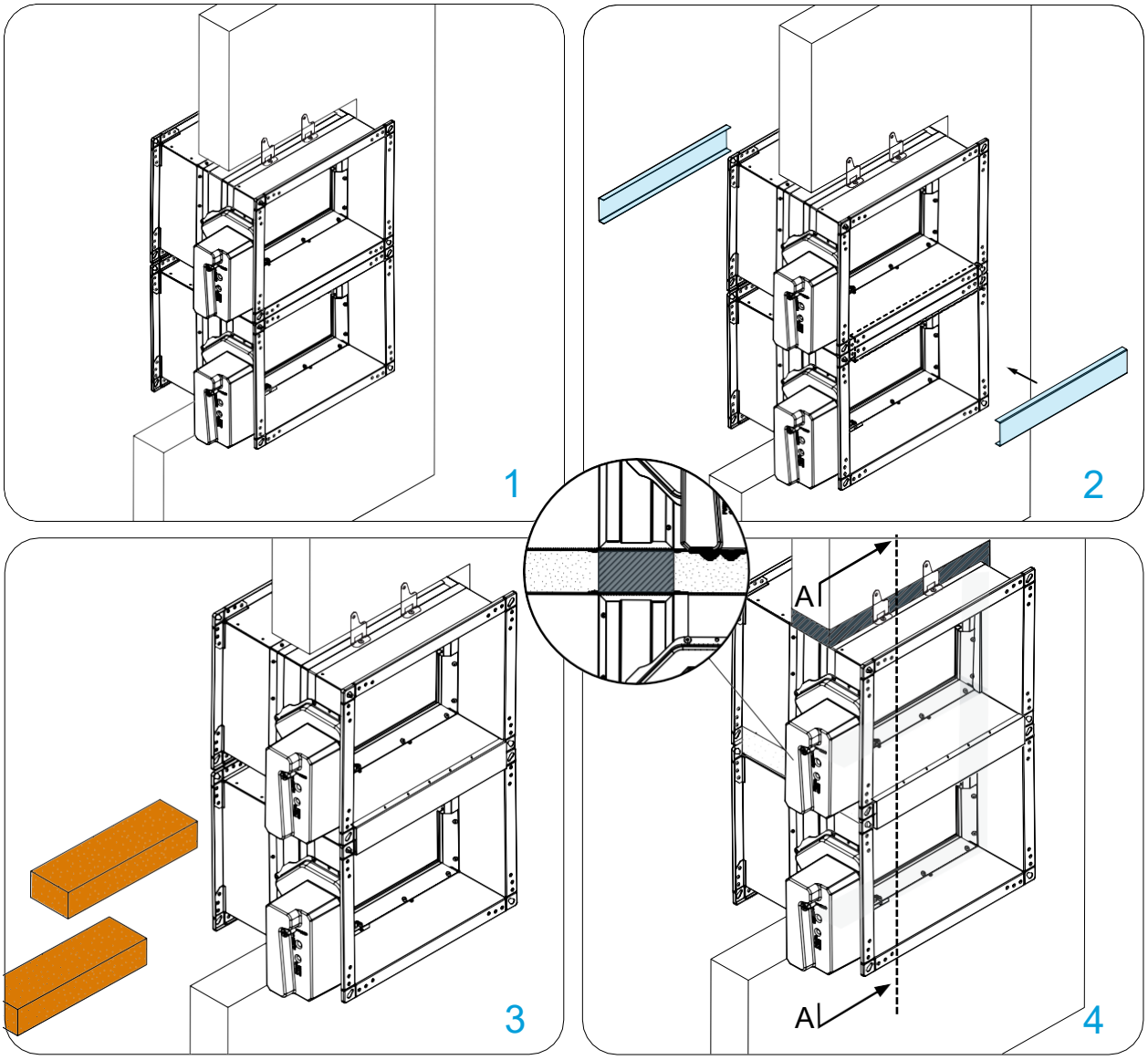

Damper blade must be closed during installation!

1. Create an opening in the wall of dimensions (B - Duct + 80mm x H - Duct + 80mm). Bend the mounting bracket by 90°. Insert the damper into the opening up to the wall boundary mark on the damper.

Connecting frame width:
CF100 - Connecting frame 100 mm

For easier installation, the fire damper can be mounted on the wall. Use approved / suitable screws for this purpose. (The mounting hole has a diameter of 6 mm.)

2. Place the installation kit “CF100” to the dampers on both sides, and attach it using the self-tapping screws every 150 mm.

3. Fill the space between the dampers with mineral wool (100 kg/m^3 of density).

4. Fill the space between the dampers and the wall with mortar.

Test the operation of the damper blade!

* The images shown are for illustration purposes only and may not be an exact representation of the product.

Battery assembly installation 2x2

Rigid wall: The wall is composed of concrete blocks (minimumdensity of 450 kg/m^3) or reinforced concrete (minimum density of 2200 kg/m^3) and with a minimum thickness of 100 mm.

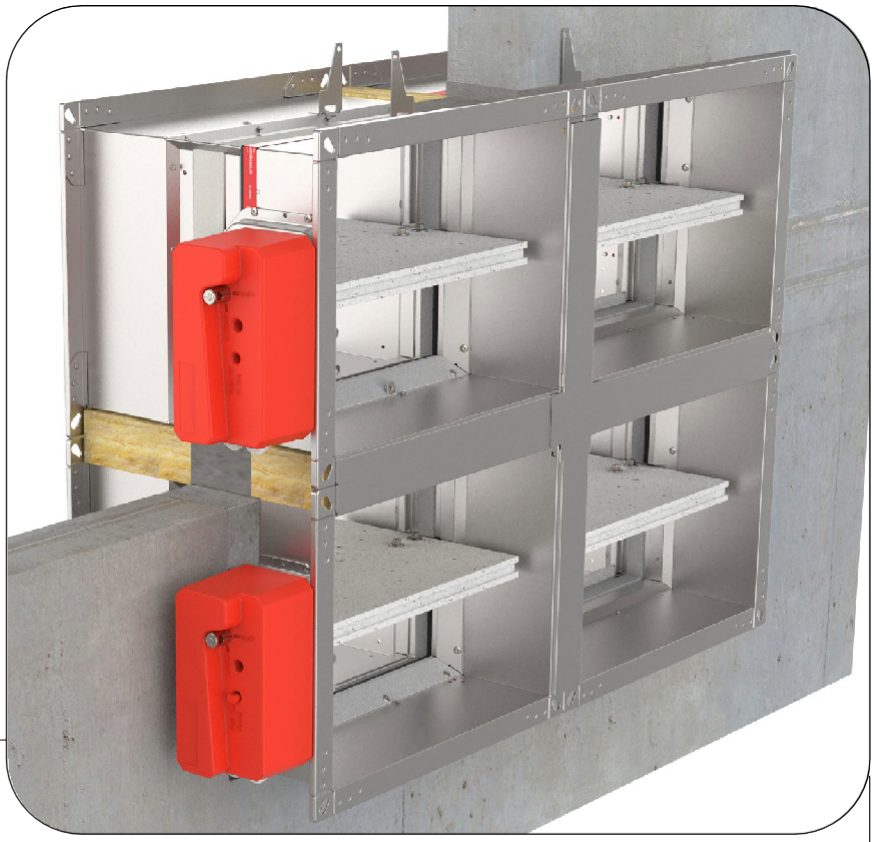

Battery installation 2 x 2 Rigid wall

A Rigid wall a
B Limit mark
C Fixing bracket with screw hole Ød 6mm, min length 30 mm
D Sealing material mortar/gypsum
E Sealing material mineral wool 100 kg/m^3 of density or higher
F Actuator position
G Connecting frame CF 100 attached with self-tapping screws every 150 mm
J Connecting plate CP 100 attached with self-tapping screws every 150 mm
H Masonry screw 6x50 mm
K Fire damper casing

Classification

FD40: EI 120 (ve i↔o)S

A:A

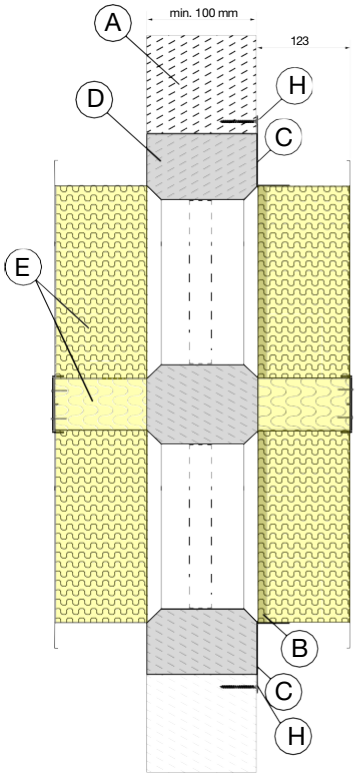

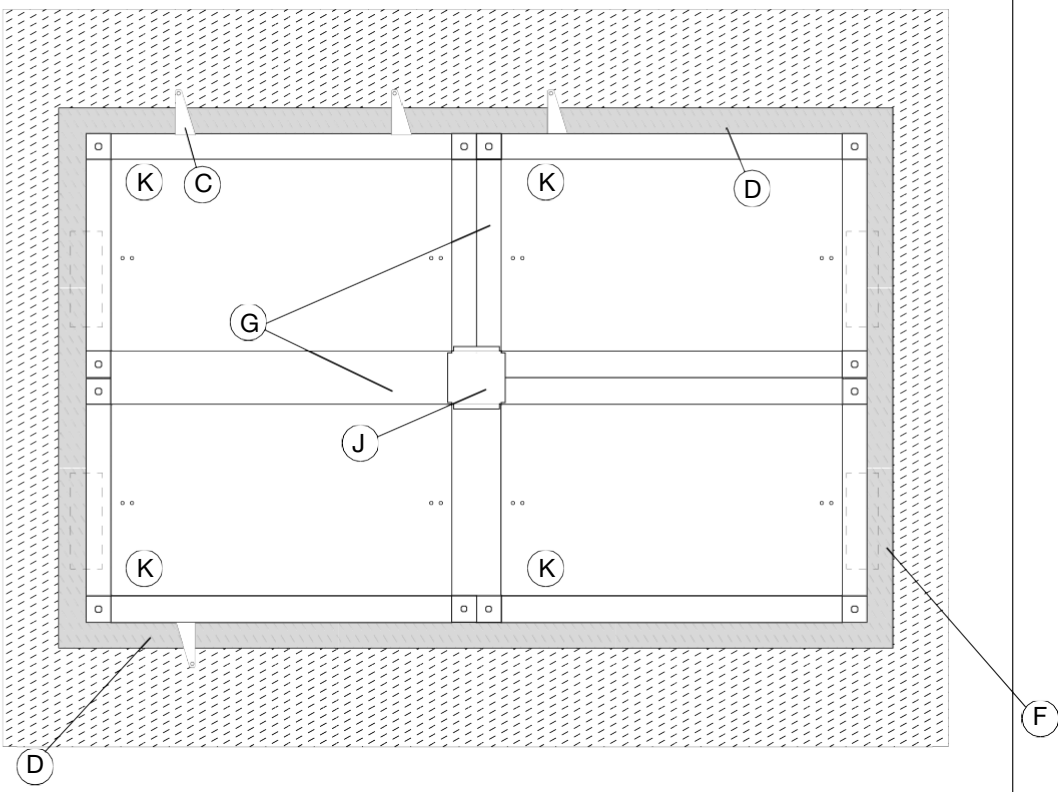

* The images shown are for illustration purposes only and may not be an exact representation of the product.

Possible damper orientations

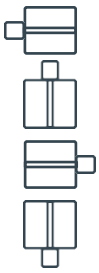

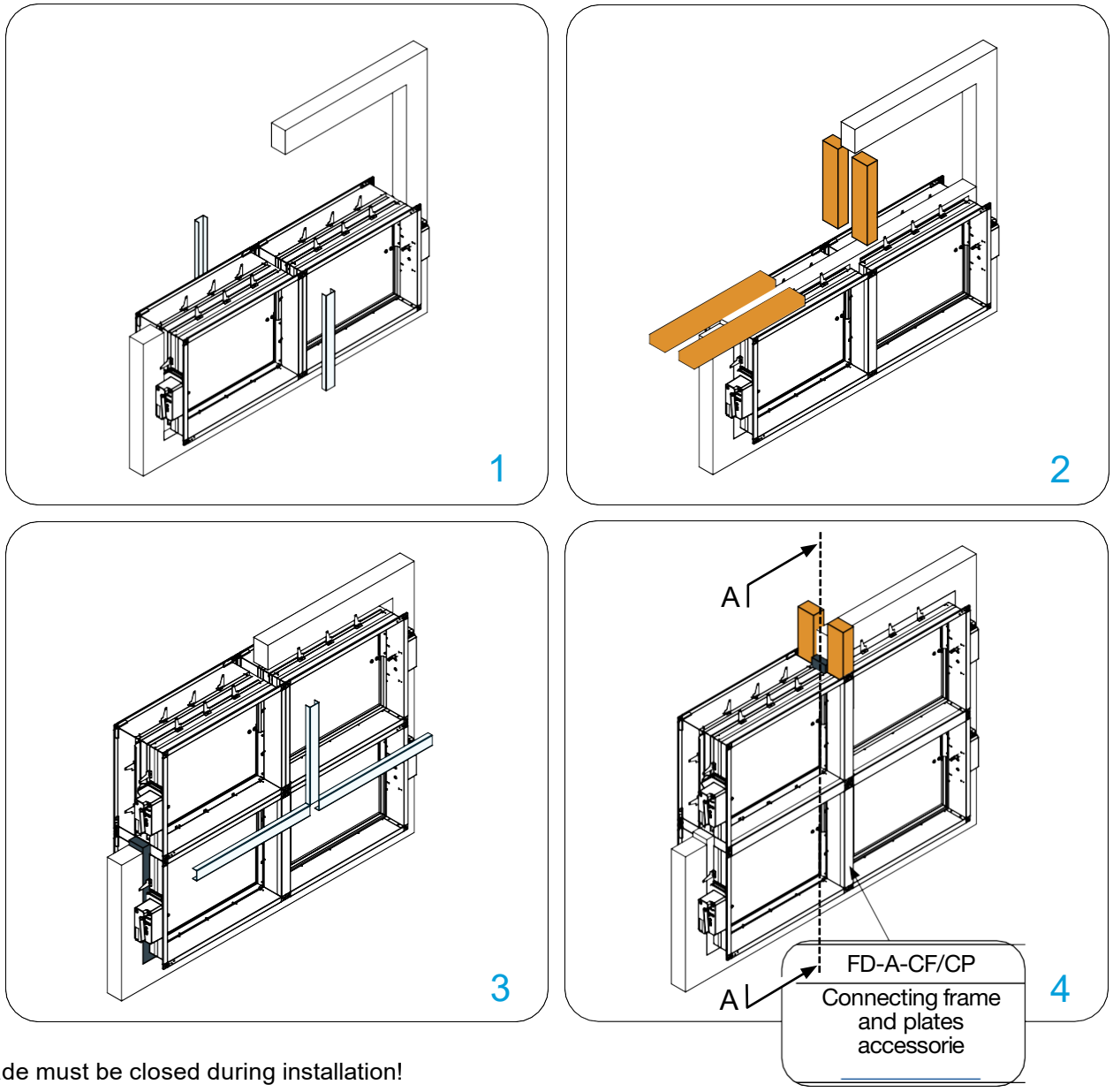

Damper blade must be closed during installation!

1. Prepare a hole of dimensions 2B + Connecting frame width (CF100) + 80 mm and 2H + Connecting frame width (CF100) + 80 mm. Fill the bottom with mortar/gypsum in 50 mm height.

2. Place two lower dampers in the opening, and fix dampers to the wall using screws (only 2 sides facing aerated concrete). Place the vertical part from the installation kit to the dampers on both sides, and attach it using the self-tapping screws.

3. Fill the space between the dampers and the wall with mortar/gypsum. Place two upper dampers and fix the dampers to the wall using the screws (only 2 sides facing aerated concrete) and place the vertical part and two horizontal parts from the installation kit to the dampers on both sides, and attach it using the self-tapping screws every 150 mm..

4. Fill the space between the dampers with mineral wool (100 kg/m^3 of density or higher), Fill the gap between dampers and wall on upper side with mortar/gypsum and the installation is complete.

Test the operation of the damper blade!

* The images shown are for illustration purposes only and may not be an exact representation of the product.

Battery assembly installation (floor/ceiling) 2x2, 1x2, 2x1

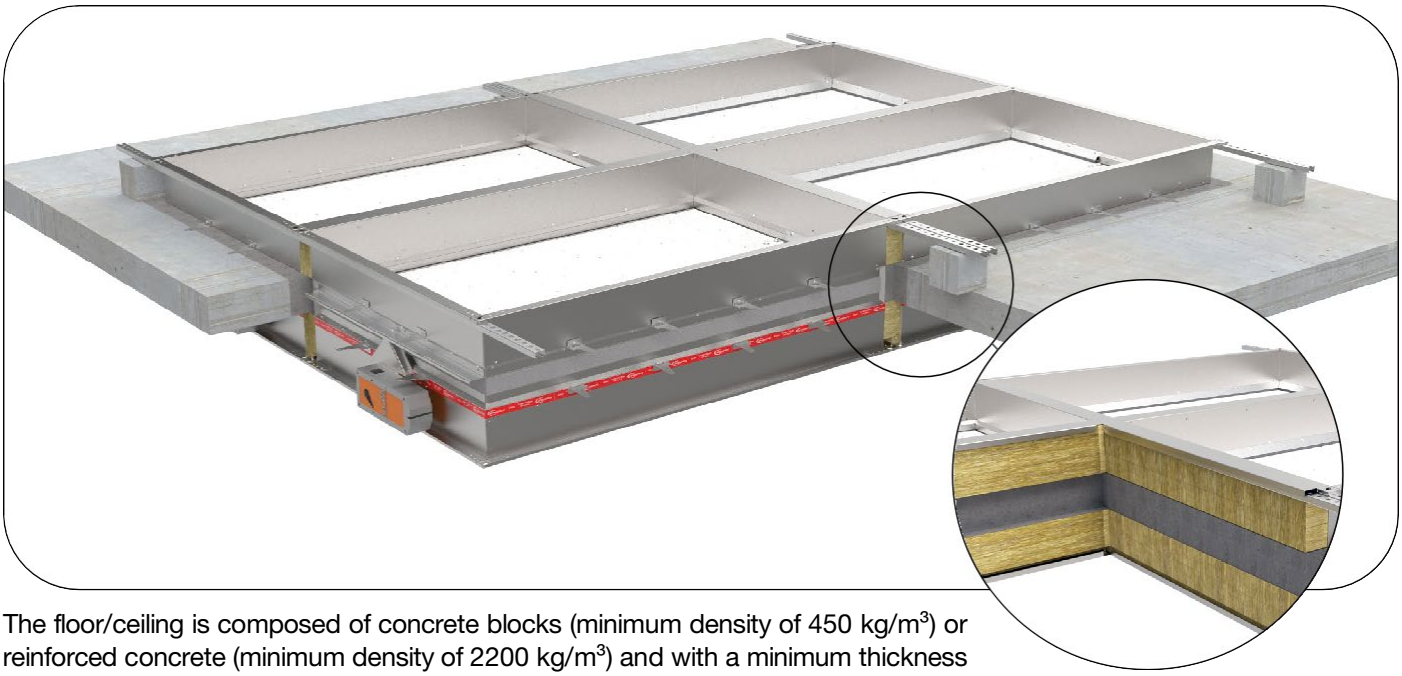

The floor/ceiling is composed of concrete blocks (minimum density of 450 kg/m^3) or reinforced concrete (minimum density of 2200 kg/m^3) and with a minimum thickness of 100 mm.

Battery installation 2 x 2 Rigid wall

A Rigid wall
B Limit mark
C Fixing bracket with screw hole Ød 6mm, min length 30 mm
D Sealing material mortar/gypsum
E Sealing material mineral wool 100 kg/m^3 of density or higher
F Actuator position
G Connecting frame CF 100 attached with self-tapping screws every 150 mm
J Connecting plate CP 100 attached with self-tapping screws every 150 mm
H Masonry screw 6x50 mm
K Fire damper casing

Classification

FD40: EI 120 (ve i↔o)S

A:A

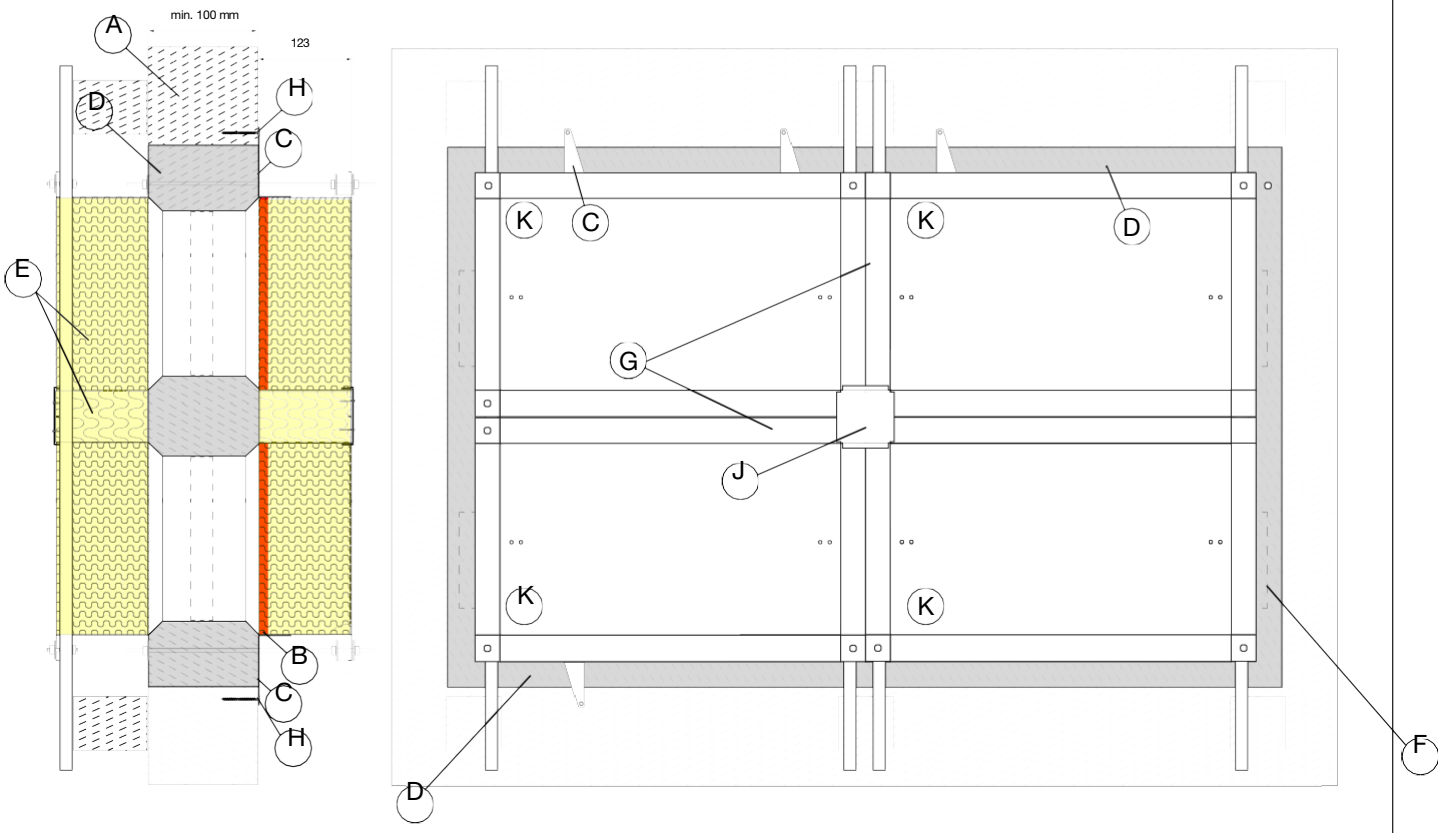

* The images shown are for illustration purposes only and may not be an exact representation of the product.

Maximum dimension of fire dampers: 2X2 grid: 1500x800 mm
*For battery installation 2x2 use 8x connecting frame and 2x connecting plate.
Installation only possible with FD40!

DOP WALLS MATERIALS

Possible damper orientations

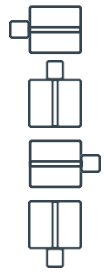

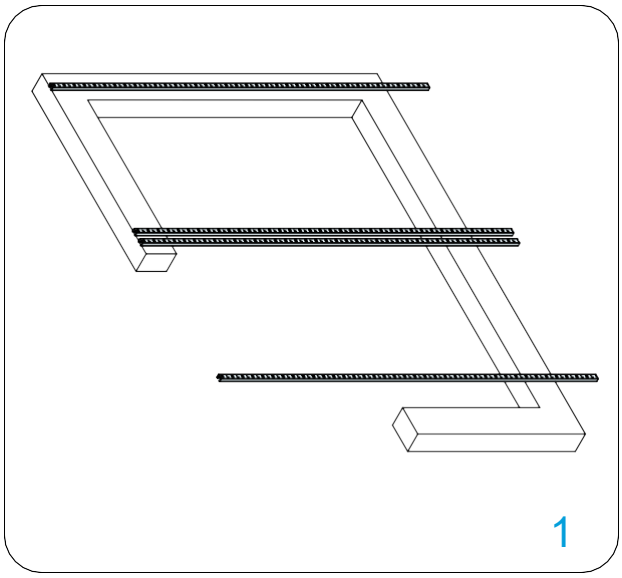

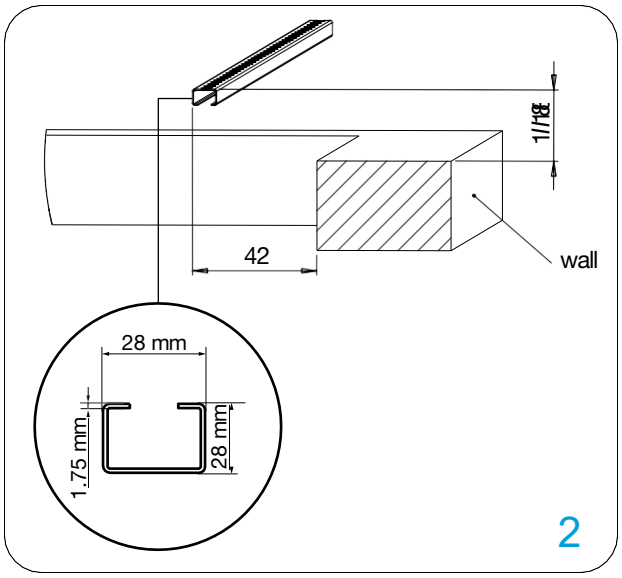

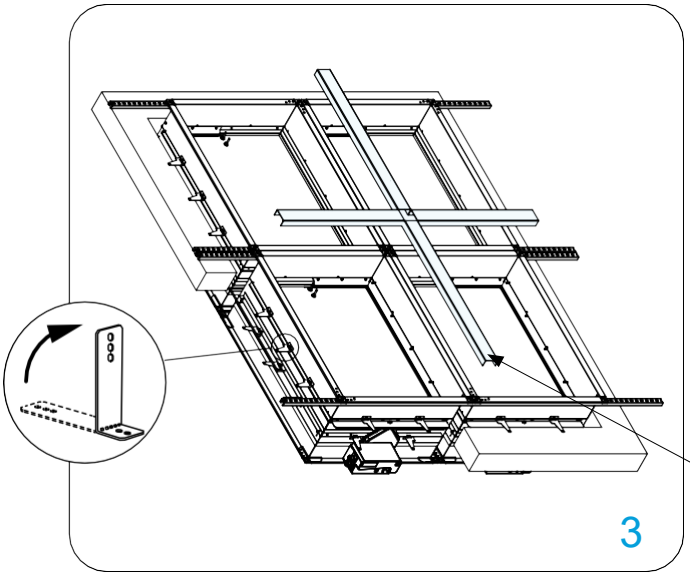

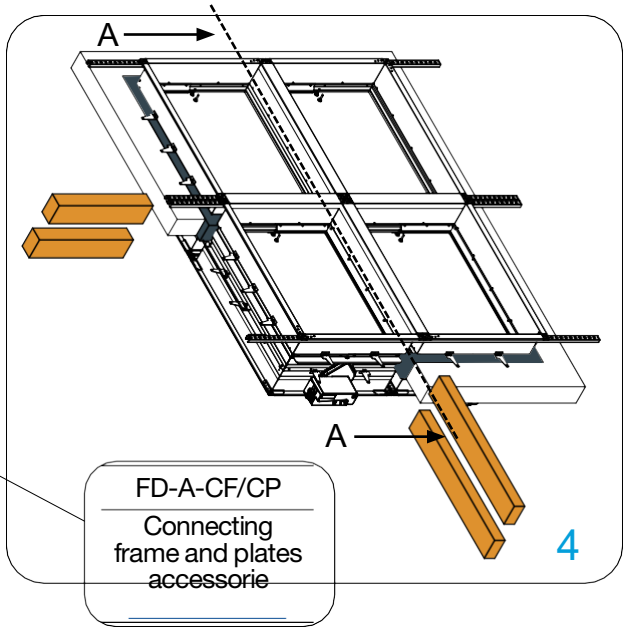

Damper blade must be closed during installation!

1. Prepare a hole of dimensions 2B + Connecting frame width (CF100) + 80 mm and 2H + Connecting frame width (CF100) + 80 mm. Set all U profiles to a height of 118 mm (use blocks of aerated concrete to keep distance between ceiling and profiles).

2. Arrangement of steel C profiles (28x28x1.75 mm).

3. Place the dampers in the openings to the wall limit mark (B) and bend the fixing bracket (C) 90°. Put them on U profiles. Fix the dampers and profiles to the ceiling using the screws for concrete. Place four connection profiles from the installation kit to the dampers on both sides and attach it using the self-tapping screws.

4. The space between fire dampers and wall and fire dampers themselves should be filled with mortar/gypsum in the thickness of the concrete slab. The remaining free space between damper casings (above and below mortar filling) should be filled with mineral wool (density 100kg/m^3 or higher). The recommended procedure is to install the lower mineral wool between casings and use it as formwork. Install additional wooden formwork around the perimiter of the installation between casing and concrete slab. Pour in the mortar up to the thickness of the concrete slab.
When the mortar sets, fill the upper space between casings with the mineral wool.

Test the operation of the damper blade!

* The images shown are for illustration purposes only and may not be an exact representation of the product.

Multiple fire dampers installation

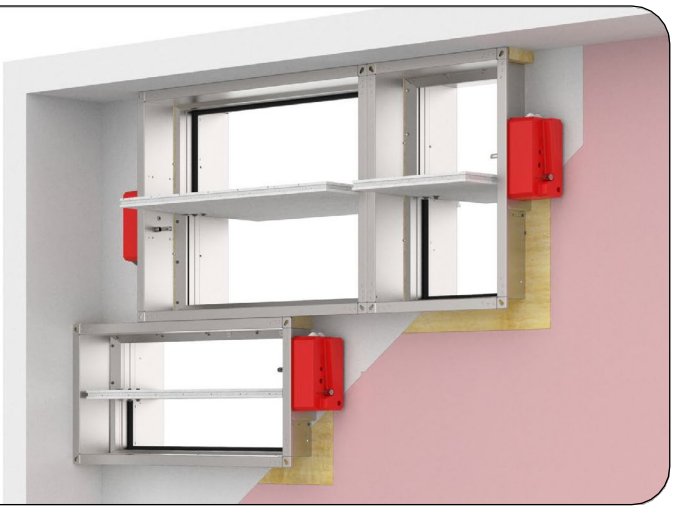

Damper blade must be closed during installation!

1. Prepare opening in the wall according to B (H) + 80 mm or 50% more (Weichschott/Firebatt installation- build the subframe according to the drawing. Fire damper can be installed with minimal distance of 30 mm between wall/ceiling and 60 mm from other dampers.
2. Insert the fire dampers into the wall. In case of Weichschott/Firebatt installation fill the space between the casings with mineral wool up to flanges. Fill the space between the wall/ceiling with mineral wool up to flanges.
3. Fill the rest of the wall openings according to the type of installation in the DOP.
4. Complete the installation according to the DOP.

Possible damper orientations

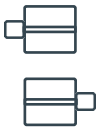

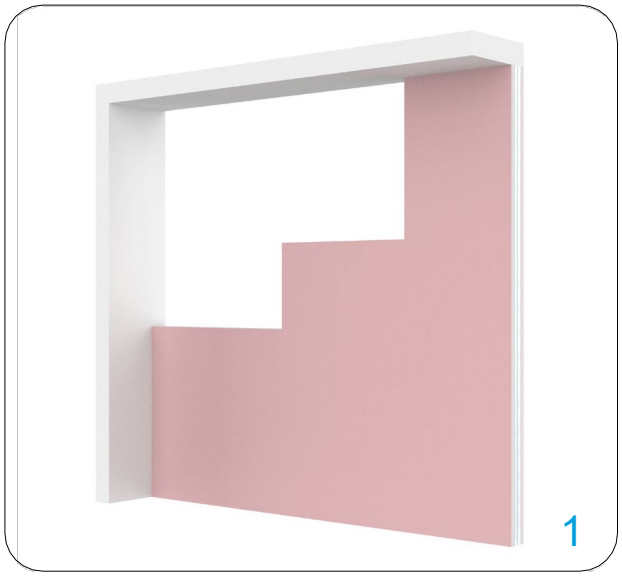

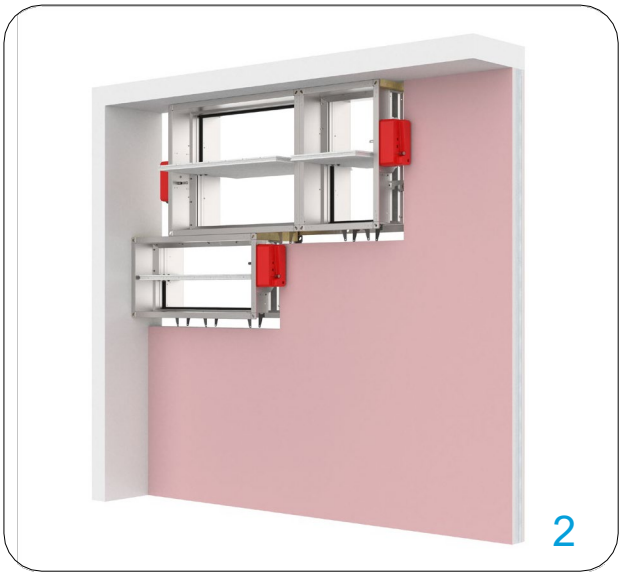

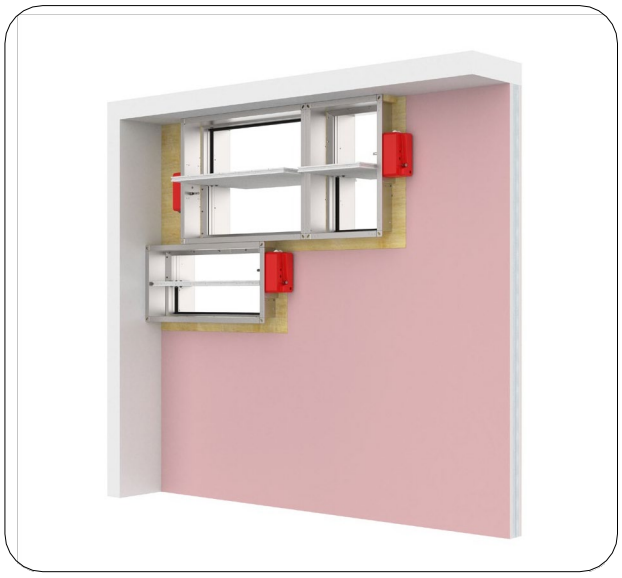

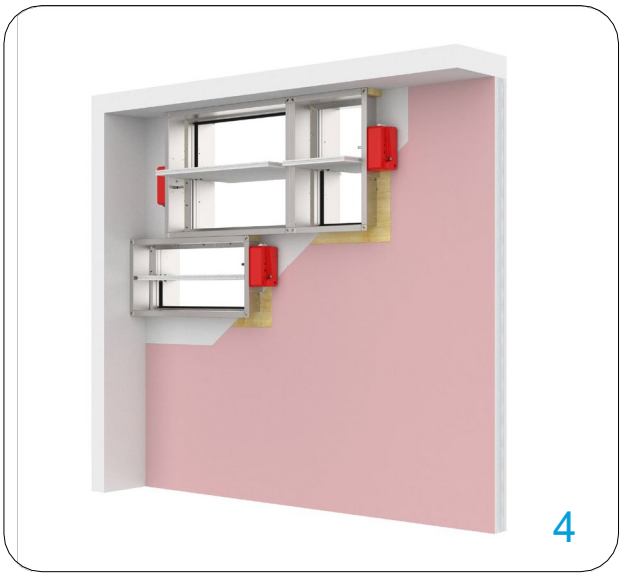

Material compliant with the classification from page 18.

*Coated mineral wool (140 kg/m^3) up to flanges from both sides
(only in case of weichschott/firebatt)

* Minimal distances from another damper or wall/ceiling.
** Minimal distances from any other penetration through the wall.

According to the standard EN 1366-2, the distance between the fire damper bodies must be at least 200 mm. This condition does not apply for tested distances. Therefore Wet and Soft installations are approved for smaller distances under condition that the resulted resistivity is reduced to EI90S.

The distance between the wall/ceiling and the fire damper must be at least 75 mm. This condition does not apply for tested distances. Therefore Wet and Soft installations are approved for smaller distances under condition that the resulted resistivity is reduced to EI90S.

* The images shown are for illustration purposes only and may not be an exact representation of the product.

Accessories

1. FD-A-SG Safety grill- Safety grill is used for protection of the fire damper and duct from large debris. Safety grille is produced out of galvanized steel and perforated with square 10x10mm perforation providing approx. 70% free cross section area. Fire damper, safety grille and, if applicable, extension piece are assembled at the factory t form a unit. FD-A-SG1-operation side, FD-A-SG2-installation side
2. FD-A-FLEX Flexible duct connections - Flexible duct connectors are used in HVAC systems for isolation from structure-borne noise, expansion compensation and fire damper connections (total length 130 mm, flexible 70mm).
3. FD-A-EXT1 Extension piece on operation side - is used when the height of the fire damper is more than 350mm and damper blade in open position is protruding out of the casing.
4. FD-A-CMB Communication module bracket
5. FD-A-IH Inspection hatch - is used for performing regular visual functionality inspection checks.
6. FD-A-CSP GKF boards for dry installation - Calcium silicate plates are used in dry installations as insulation cover. It keeps the insulation in place and provides for better fire penetration characteristics of the whole installation. Cover the complete perimeter around fire damper from both sides with boards in 150 mm height.
7. FD-A-EXT2 Extension piece on installation side (250 mm)
8. FD-A-CIRC Circular connections - Are used to connect the circular ventilation ducts to the rectangular fire dampers.
9. FD-BP-KIT Thermal fuse blanking plate- is used for covering the thermal fuse hole on the casing in case of changing from the motor to the manual actuator. Installation with performed with 2 self-taping screws

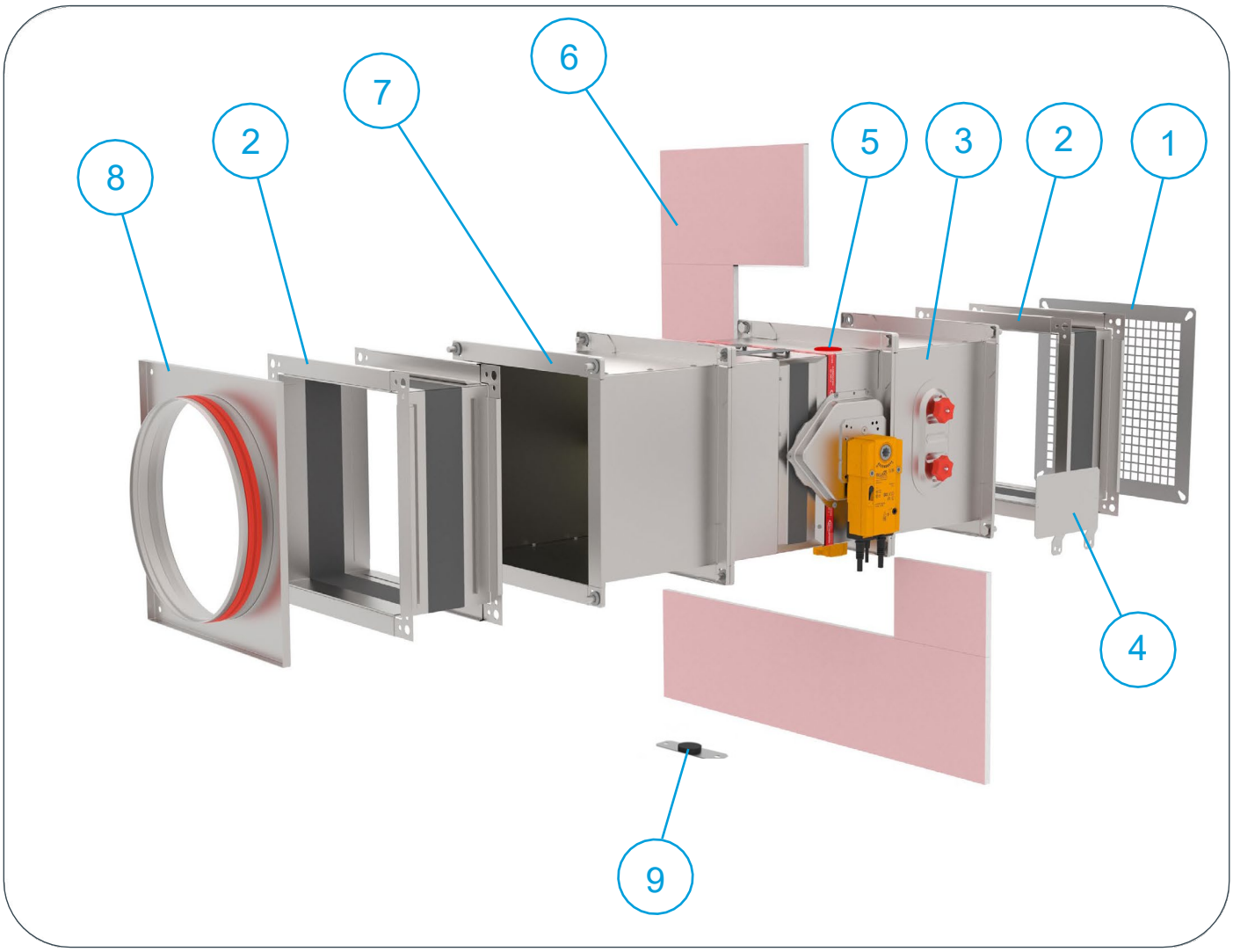

* The images shown are for illustration purposes only and may not be an exact representation of the product.

Accessories for Battery installations

1. CF100 - Connecting frame 100 mm

-Connecting frame length is 200... 1500 [mm]

2. CP100 - Connecting plate 100 mm

Attach the connecting frames to the dampers using the self-tapping screws every 150 mm and 4 self-tapping screws on every connecting plate.

CF100/CP100 kits are used when overall size of the battery installation needs match standard ventilation duct sizes (i.e. divisible by 50mm).

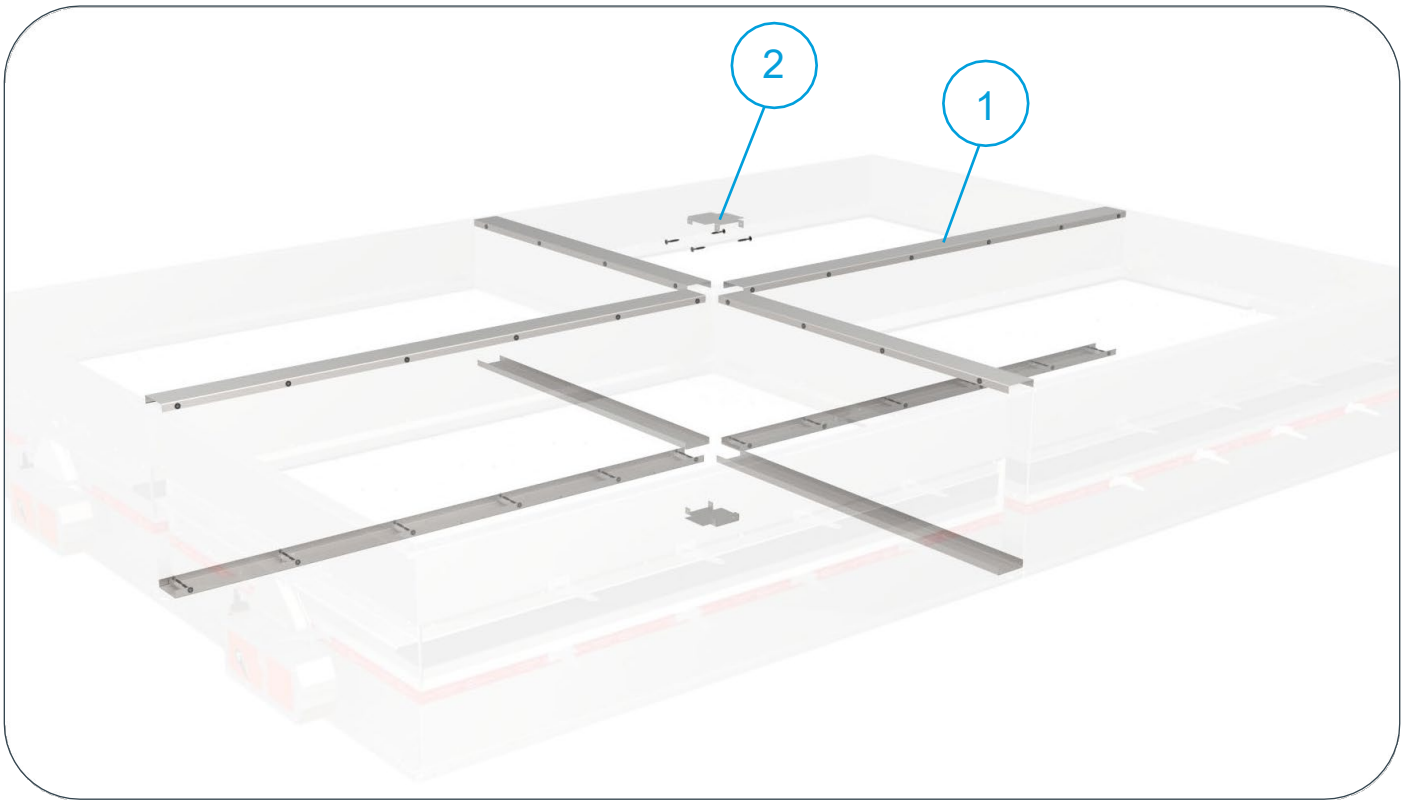

CF100

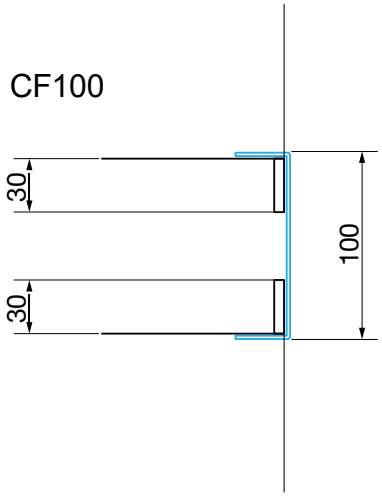

CP100

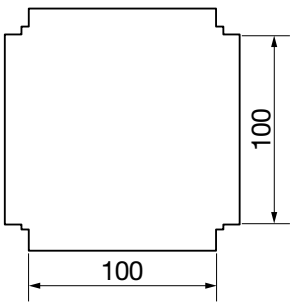

* The images shown are for illustration purposes only and may not be an exact representation of the product.

Spare parts

For safety reasons, parts need to be changed by a trained personnel or the manufacturer.
WARNING! Install the original parts only!

1. FD-A-THERM-72 Fuse kit
2. FD-A-R25S-KIT Double contact S kit
3. FD-A-R40S-KIT Double contact S kit
4. FD-A-EMS-KIT Solenoid actuator
5. FD-A-BAT72 Belimo thermal fuse 72°C
6. FD-A-ZBAT95 Belimo thermal fuse 95°C
7. Belimo BFL Kit A Upgrade to electric actuator (Belimo BFL)
8. Belimo BFN Kit B Upgrade to electric actuator (Belimo BFN)
9. Belimo BF Kit C Upgrade to electric actuator (Belimo BF)
10. FD-A-R40 R40 manual mechanism
11. FD-A-ERK Electric actuator rotation kit
12. FD-SSA Smoke sensor
13. MWC Mineral wool cover (for remote installation)
14. LS35 Promat cover (for remote installation)

1

2

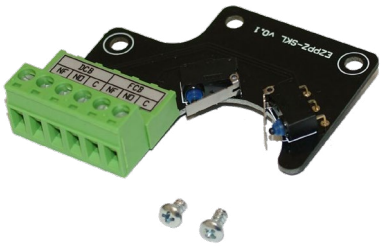

3

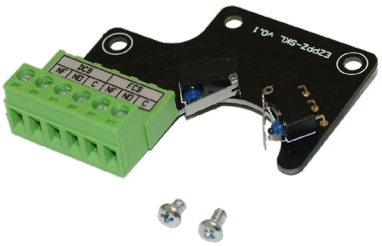

4

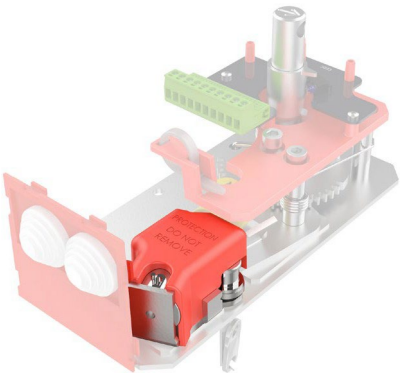

5

6

* The images shown are for illustration purposes only and may not be an exact representation of the product.

7

8

8

9

10

11

12

13

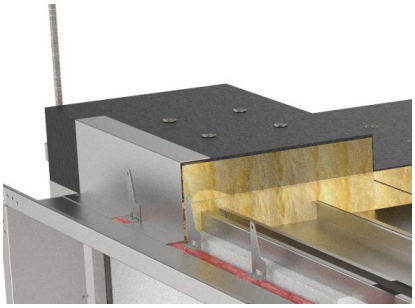

14

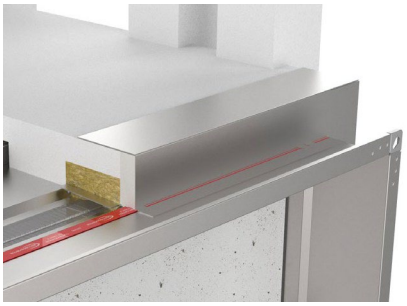

* The images shown are for illustration purposes only and may not be an exact representation of the product.

MANUAL ACTUATORS R, R-S

Manual operating mechanism, optionally with end switches (R-S). In case of fire, the fire damper closes automatically. Damper closing can be initiated either by thermal fuse melting, or by manual activation on the operating mechanism. Upon closure, damper blade is locked in closed position and can only be opened manually. Thermal fuse melting point is 72 °C.

R25
R25 manual actuator is installed on FD25 fire dampers range from 100x200 till 800x600. It is available in version with (R-S) and without (R) end switches. End switches and thermal fuse are easily replaceable and available as service parts.
To upgrade to EMS, upgrade of R25 to R40 is required.

R40
R40 manual actuator is installed on FD40 fire dampers from 800x600 till 1500x800. It is available in version with (R-S) and without (R) end switches. In case remote activation is needed, R40 actuator is easily upgradeable to electromagnetic EMS-S actuator with installation of the electromagnet. End switches, thermal fuse and electromagnet are easily replaceable and available as service parts.

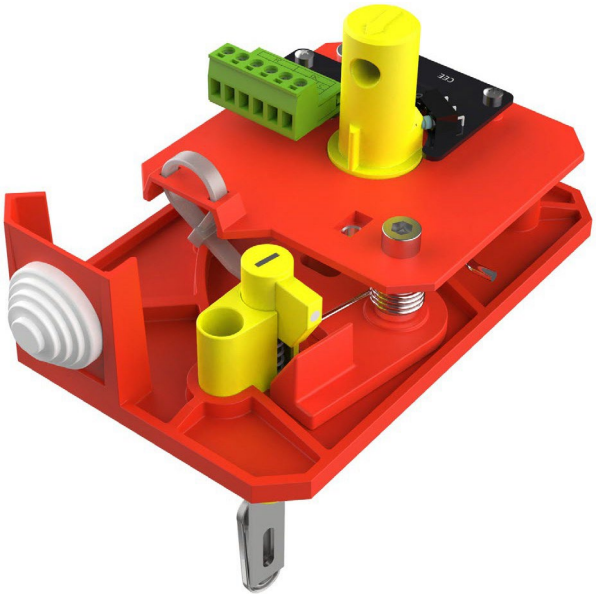

Technical specifications

Nominal voltage	N/A
Power	N/A
Switching capacity	1mA…500mA, 5VDC…48VDC
Blade closing time	Spring: 1 sec
Blade opening time	Manual
Manual activation	Release button on the casing
Degree of protection	IP 42
Ambient temperature range	min. -30 °C, max. 50 °C
Ambient humidity	95% r.h., non-condensing
Service life	Min. 30,000 cycles
Maintenance	Maintenance-free
Weight R25/R40	0,5 kg / 1,7 kg

Wiring diagram

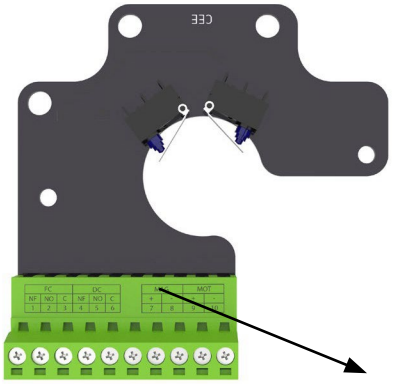

FC			DC		
NF	NO	C	NF	NO	C
11	12	13	14	15	16

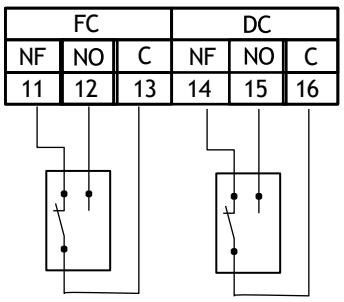

FC = Limit switch - end
DC = Limit switch - start
NO = normally open
NF = normally closed
C = common

* The images shown are for illustration purposes only and may not be an exact representation of the product.

SOLENOID ACTUATOR EMS-S

Electromagnetic operating mechanism, comes with end switches as standard. In case of fire, the fire damper closes automatically. Damper closing can be initiated either by thermal fuse melting or remotely by triggering the electromagnet. Electromagnet is constantly under power and activates closing of the damper blade in case the power cuts out. Upon closure, damper blade is locked in closed position and can only be opened manually. Thermal fuse melting point is 72 °C. EMS-S mechanism is the same for FD25/ FD40 fire dampers.

Technical specifications

Nominal voltage	Solenoid: 24/48 VDC
Power	Dual voltage SOLENOID: Break of current: Pnom = 1.6W
Switching capacity	1 mA…500 mA, 5 VDC…48 VDC
Blade closing time	Spring: 1 sec
Blade opening time	Manual
Manual activation	Release button on the casin
Degree of protection	IP 42
Ambient temperature range	min. -30 °C, max. 50 °C
Ambient humidity	95% r.h., non-condensing
Service life	Min. 30,000 cycles
Maintenance	Maintenance-free
Weight	2,2 kg

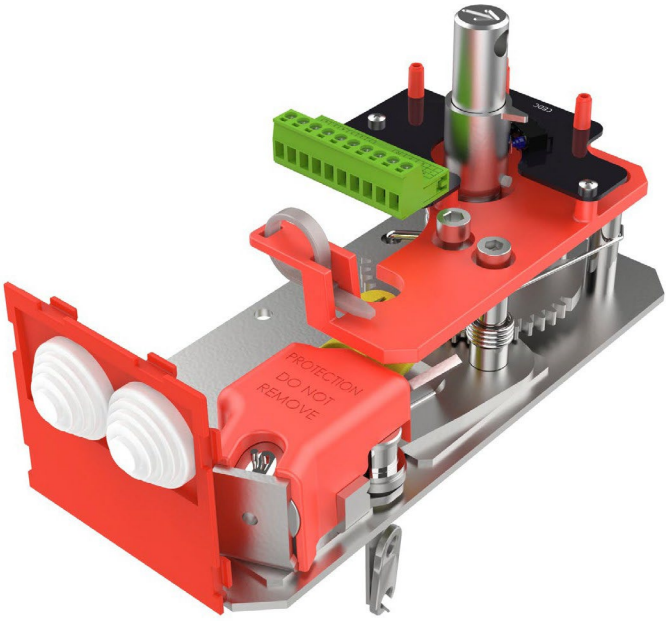

Wiring diagram

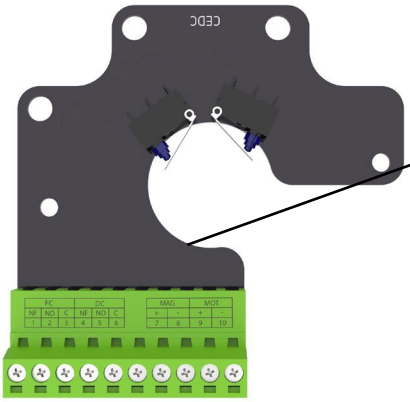

FC			DC			MAG		MOT	
NF	NO	C	NF	NO	C	++	--		
1	2	3	4	5	6	78		91	0

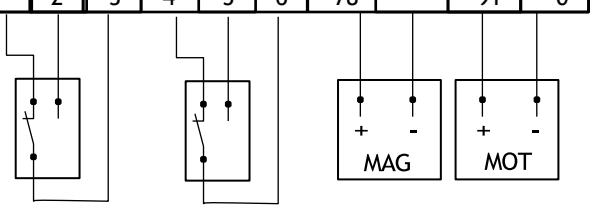

FC = Limit switch - end
DC = Limit switch - start
NO = normally open
NF = normally closed
C = common

* The images shown are for illustration purposes only and may not be an exact representation of the product.

ELECTRIC ACTUATOR M24-S, M230-S, M230-S-ST, M24-S-ST

Damper is delivered in closed position. When electric actuator is connected to the power supply damper will open. When the damper reaches the end position (damper open), the electro motor will stop. Closing fire damper takes place automatically when a power failure occurs. Thermal tripping device that comes with fire damper causes power circuit break at a temperature of 72 °C, optional 95 °C (inside or outside duct). If checking is needed for proper functioning of fire damper, pushing the switch on the thermal tripping device will close damper.

When switch on tripping device is released, the damper will open. Damper can be opened without connecting to a voltage with enclosed handle turning in the direction of the arrow on electric actuator (clockwise). Damper can be locked in the desired position by fast turning back handle a quarter of a turn (counter clockwise) for Belimo BF, and by puling brake on Belimo BFL and BFN.

To unlock the electro motor, turn handle clockwise for a quarter of a turn for Belimo BF, or release brake for Belimo BFL and BFN. After release, damper will be closed by return spring. When damper is opened manually, electric actuator will not move the damper into closed position in case of power failure.

Technical specifications

Type of Belimo actuator		BFL24-T	BFN24-T	BFL230-T	BFN230-T	BF24-T	BF230-T
	voltage	AC/DC 24 V, 50/60 Hz	AC 24 V, 50/60 Hz	AC 230 V, 50/60 Hz	AC 230 V, 50/60 Hz	AC/DC 24 V, 50/60 Hz	AC 230 V, 50/60 Hz
Nominal voltage / power	opening	2,5 W	4 W	3,5 W	5 W	7 W	8.5 W
	holding	0,8 W	1,4 W	1,1 W	2,1 W	2 W	3 W
	for wire sizing	4 VA	6 VA	6,5 VA	10 VA	10 VA	11 VA
End switch		1 mA...3 A (0,5 A), DC 5 V...AC 250V	1 mA...3 A (0.5 A), DC 5 V...AC 250 V	1 mA...3 A (0.5 A), DC 5 V...AC 250 V	1 mA...3 A (0.5 A), DC 5 V...AC 250 V	1 mA...6 A (3 A), DC 5 V...AC 250 V	1 mA...3 A (0.5 A), DC 5 V...AC 250 V
Running time	motor	< 60 s	< 60 s	< 60 s	< 60 s	< 120 s	< 120 s
	spring return	~ 20 s	~ 20 s	~ 20 s	~ 20 s	~16 s	~16 s
Ambient temperature range		min. -30 °C, max. 50 °C					

Wiring diagram

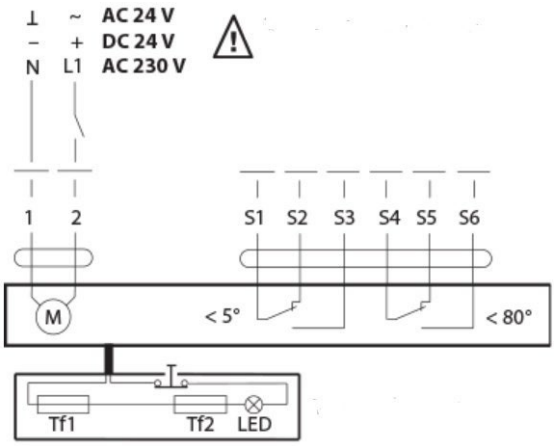

1	negative (direct-current) or neutral (alternating current)
2	positive (direct-current) or faze (alternating current)
S1	common micro switch closed damper
S2	normally closed micro switch closed damper
S3	normally open micro switch closed damper
S4	common micro switch open damper
S5	normally closed micro switch open damper
S6	normally open micro switch open damper
Tf	temperature sensor on the outer side of the duct (ambient temperature) max. 72 °C

* The images shown are for illustration purposes only and may not be an exact representation of the product.

ELECTRIC ACTUATOR

Position of thermal fuse

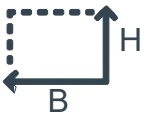

H < 300
Thermal fuse is located on the underside of the fire damper.

300 ≤ H ≤ 450
Thermal fuse is located on the same side as Belimo actuator (above).

H > 450
Thermal fuse is located on the same side as Belimo actuator (below).

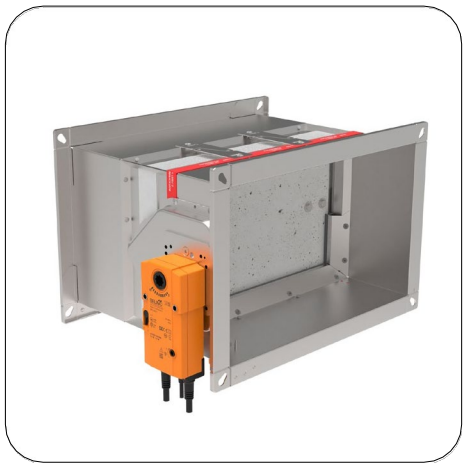

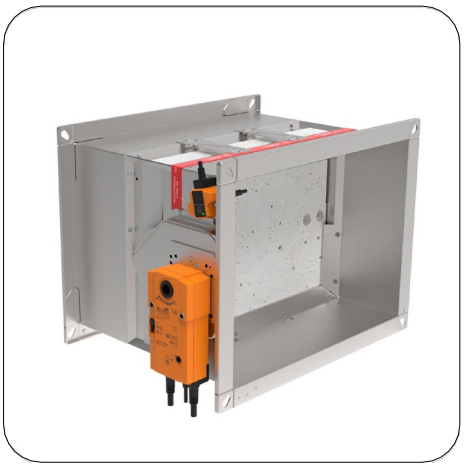

Bottom view

Side view

Side view

* The images shown are for illustration purposes only and may not be an exact representation of the product.

ELECTRIC ACTUATOR SCHISCHEK ExMax

Damper is delivered in closed position. When electric actuator is connected to the power supply damper will open. When the damper reaches the end position(damper open), in which is it blocked, the electric actuator will stop. Closing fire damper takes place automatically when a power failure occurs. Thermal tripping device that comes with fire damper causes power circuit break at a temperature of 72 °C (inside or outside duct).
If checking is needed for proper functioning of fire damper, pushing the switch on the thermal tripping device will close damper. When switch on tripping device is released, the damper will open.
Damper can be opened without connecting to a voltage with enclosed Allen key, by turning in the direction of the arrow on electric actuator (clockwise). After release of Allen key, damper will go to closed position.

1) Tecnical documentation Safety temperature trigger Schischek ExPro-TT
2) Tecnical documentation electric actuator Schischek ExMax-5.10-BF
3) Tecnical documentation Ex-e terminal box ExBox-BF

Technical specifications

Type	ExMax -5.10-BF
Torque	5/10 Nm
Power Supply	24-230 V AC/DC
Running time	3/15/30/60/120 s / 90°
Spring return	3 or 10s / 90°
Control mode	On-Off, 3 position
Feedback	2 x aux switches + Ex. tripping device
Ambient temperature range	min. -40 °C, max. 40 °C
Ambient humidity	0-90% r.h., non-condensing
Service life	Min. 10,000 cycles @ 10 s, min 1000 cycles @ 1s
Maintenance	Maintenance-free
Weight	3,5 kg

Wiring diagram

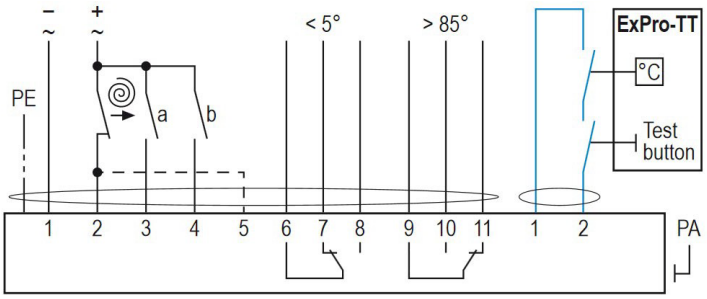

* The images shown are for illustration purposes only and may not be an exact representation of the product.

SMOKE SENSOR ASSEMBLY FD-SSA

Smoke sensor assembly is developed to detect smoke in ventilation ducts and combines a smoke detector and an adaptor system where both tube and housing are specially designed for optimum airflow through the smoke detector. Smoke sensor provides the signal for the fire damper which is activated when smoke is detected. Smoke sensor assembly consists of casing (length: 415 mm), smoke sensor and specially designed venturi pipe inside the duct.

For proper functioning of the smoke sensor (as it is physically connected as in the render above) a straight length of 5 times hydraulic diameter, in the size of the connecting duct, should be in front of the sensor. When the sensor is installed separate from the fire damper there are two conditions to be met:

1) Length of 5 times hydraulic diameter, in the size of the connecting duct, should be in front of the sensor.

2) Length of 3 times hydraulic diameter, in the size of the connecting duct, should be after the sensor.
dh=(2xHxB)/(H+B)s, dh - hydraulic duct diameter.

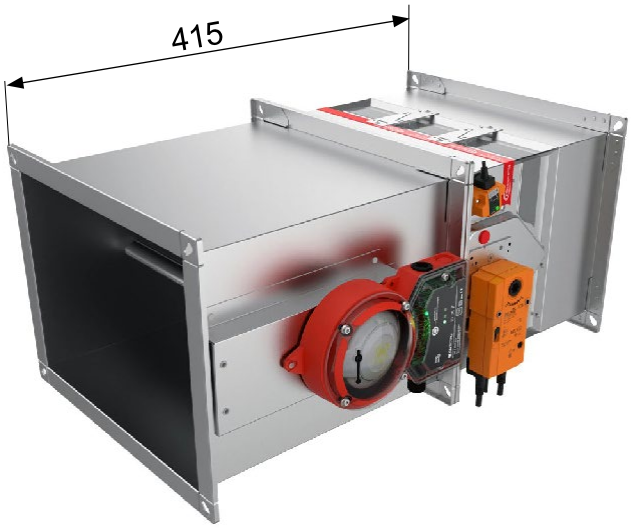

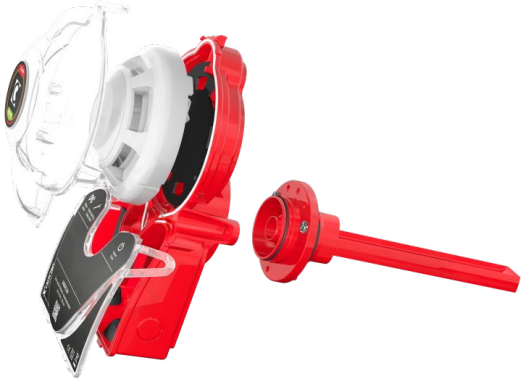

Technical specifications

	FD-A-UG-8-E-24	FD-A-UG-8-E-230
Voltage Supply	24V AC/DC ±10% Not polarity sensitive	230V AC ±10%, Not polarity sensitive
Detector type	Optical EVC-PR-DA	Optical EVC-PR-DA
Max. power consumption	85 mA (DC), 235 mA (AC)	100 mA
Operating temperature	-20°C to +55°C	
Maximum humidity	95% rH	
Duct air velocity range	1 to 20 m/s	
Approvals	VdS, CE, EN-54-27	
Relay output	Potential free	
Smoke alarm relays	One changing contacts 250V, 8A and one bracking contact 250V, (A	
Service alarm	One breaking contact 250V, 1A	
System error alarm	One breaking contact 250V, 1A	
Low Flow alarm:	One breaking contact 250V, 1A	
LED on smoke detector:	Yellow - service alarm(contamination) Red - smoke alarm	
LED on PCB:	Green - normal operation Yellow flashing - system error Yellow - Low-Flow	

Wiring diagram

FD-A-UG-8-AFR-24V

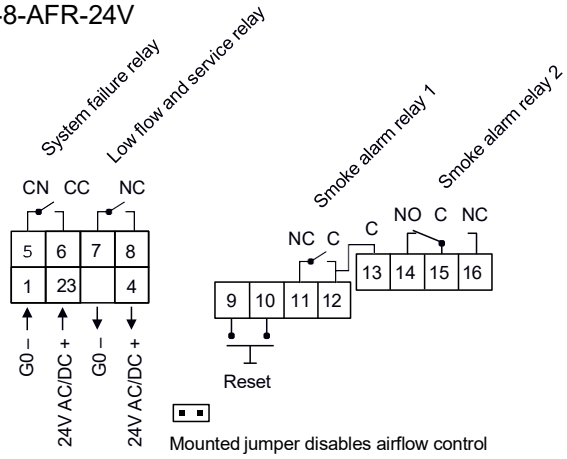

FD-A-UG-8-AFR-230V

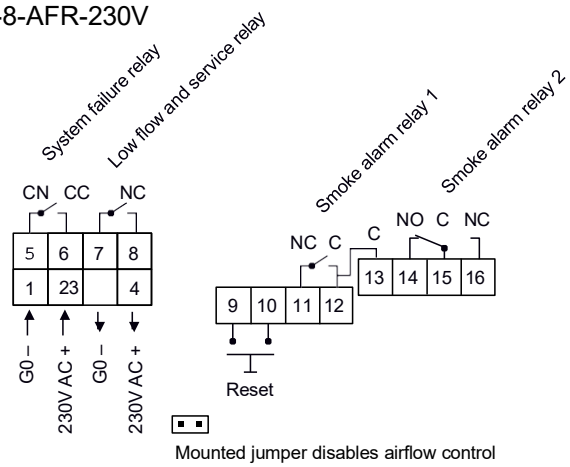

* The images shown are for illustration purposes only and may not be an exact representation of the product.

UPGRADE TO END CONTACTS (R25 → R25-S)

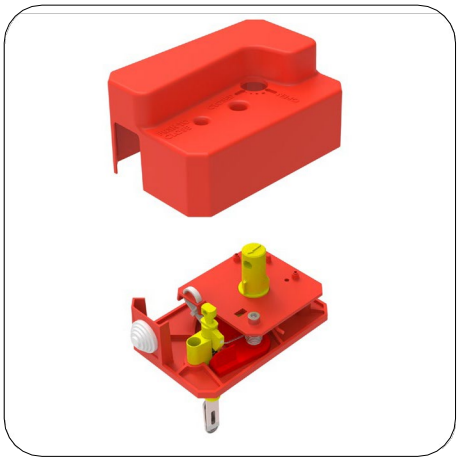

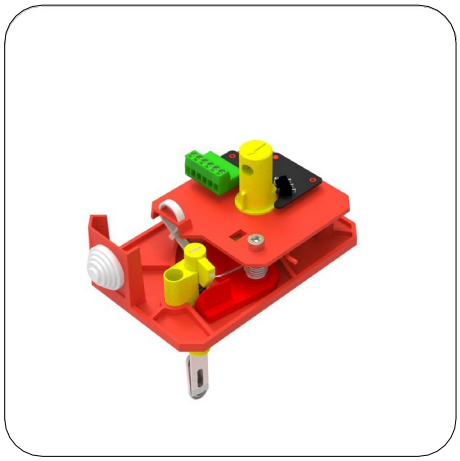

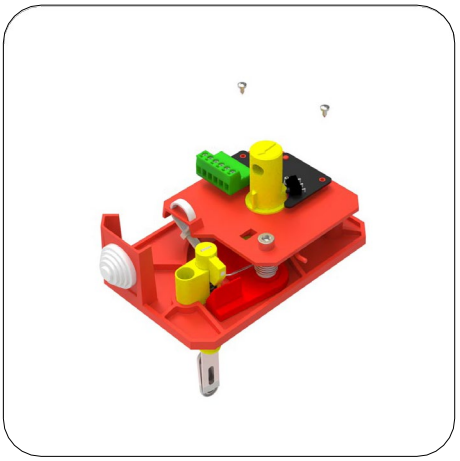

1. Locate hex screw, unscrew it and remove the cover.
2. Insert R25/R40 board in the appropriate place.
3. Screw the board to the plate. Put the cover back in place!

UPGRADE TO END CONTACTS (R40 → R40-S)

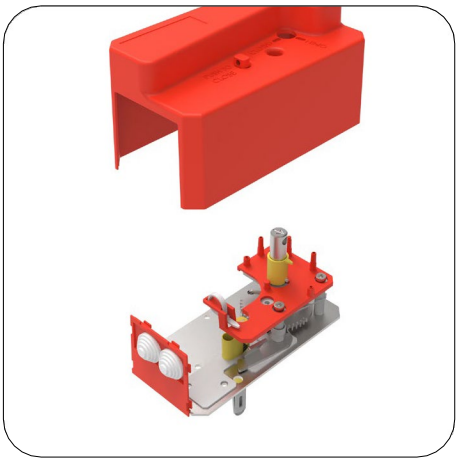

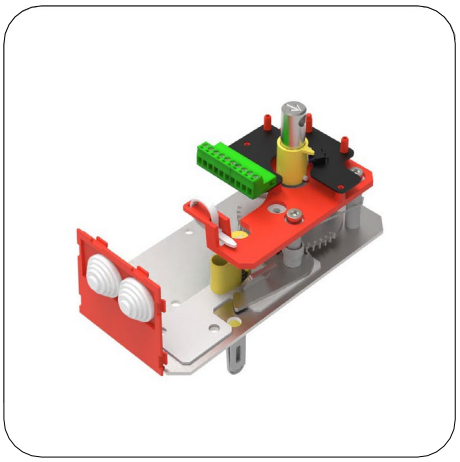

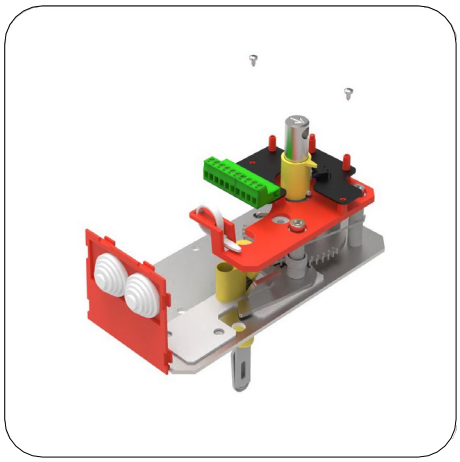

* The images shown are for illustration purposes only and may not be an exact representation of the product.

UPGRADE FROM MANUAL (R40-S) TO EMS

Before upgrade R40 to EMS, it is necessary to install kit for end contacts (FD-A-R40S-KIT).
Before upgrade R25/RS25-S to EMS, it is necessary to install R40 mechanism (FD-A-R40) and kit for end contacts (FD-A-R40S-KIT).

To upgrade to EMS you need to use the EMS kit!

Service work may only be performed by authorized persons!

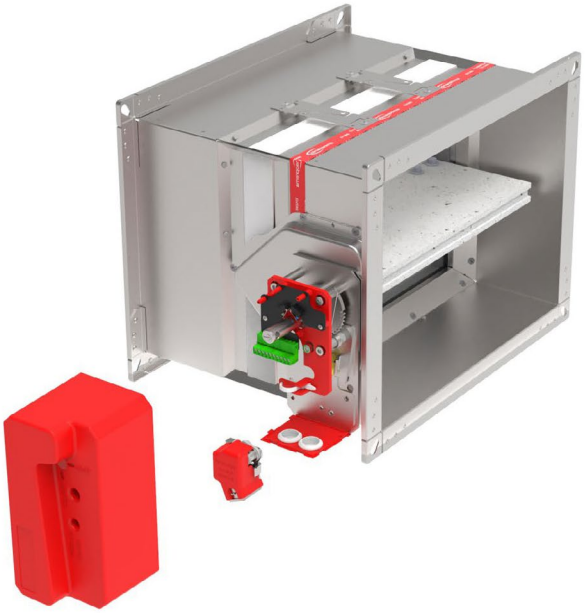

1. Locate hex screw. Unscrew it and remove the cover.
2. Insert the EMS on the custom plate.
3. Screw the EMS to the plate and connect the 2-pin connector into the appropriate socket on the CEDC board.
4. Put the cover back in place.

Test the operation of the damper blade!

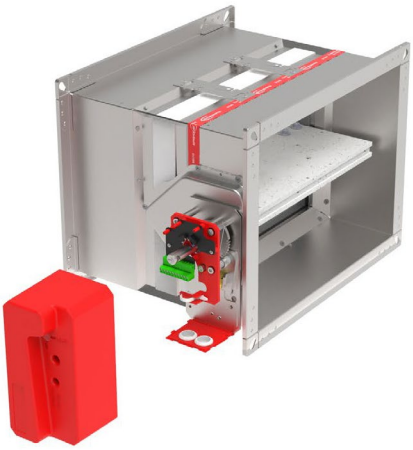

1

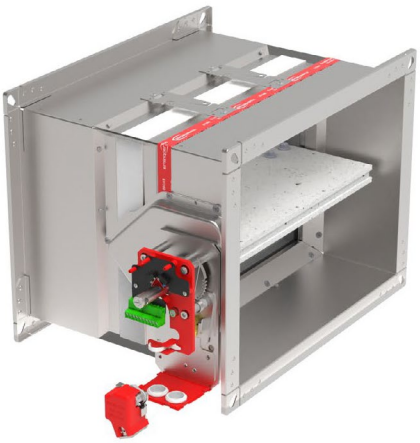

2

3

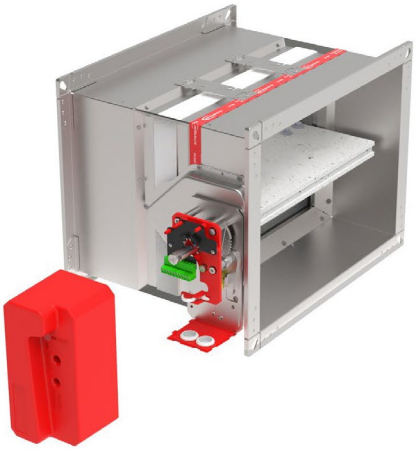

4

* The images shown are for illustration purposes only and may not be an exact representation of the product.

REPLACEMENT OF THERMAL FUSE (R25)

1. Find the hex screw located on the cover. Unscrew and remove the screw and the cover.
2. Find the hex screw on the thermal fuse and unscrew it.
3. Remove the old thermal fuse. Insert a new thermal fuse and screw it back on.
4. Put the cover back in place.

Test the operation of the damper blade!

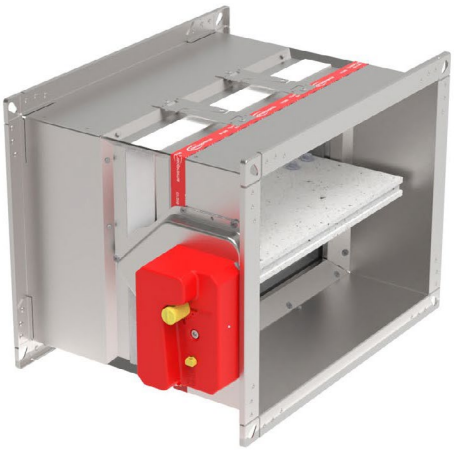

1

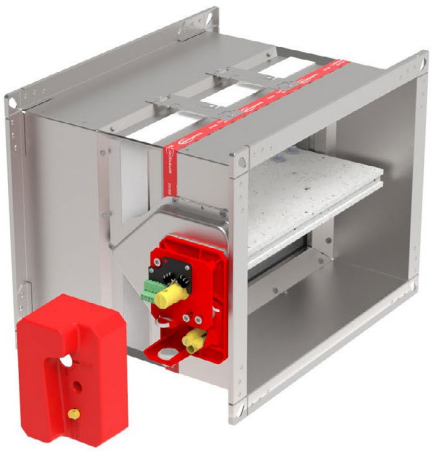

2

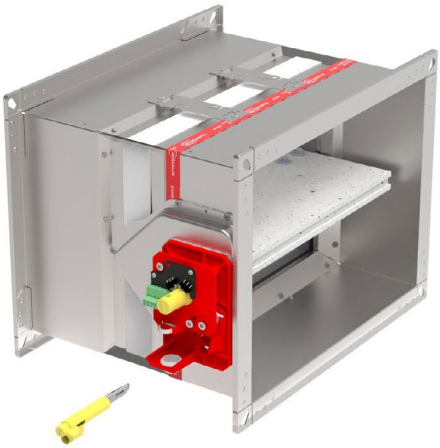

3

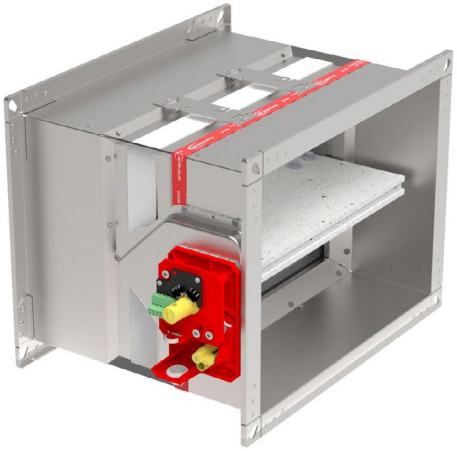

4

* The images shown are for illustration purposes only and may not be an exact representation of the product.

REPLACEMENT OF THERMAL FUSE (R40)

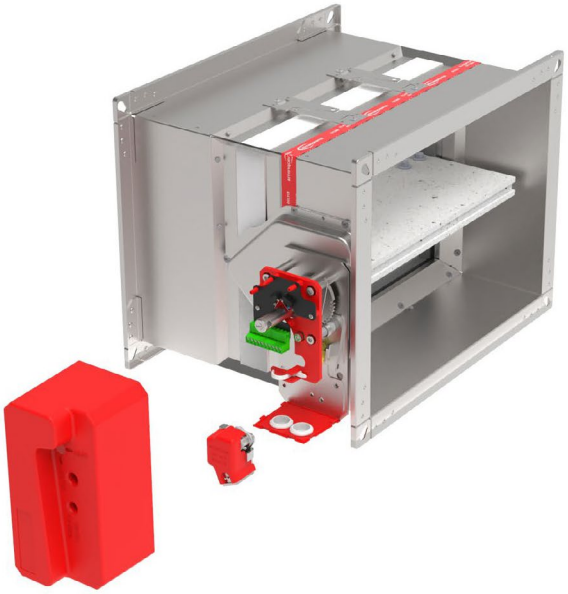

1. Find the hex screw located on the cover, unscrew and remove the screw and the cover.
2. Remove the position indicator sleeve.
3. Locate the 3 hex screws. Unscrew them. Remove the CEDC board (if applicable).
4. Locate the screw on the thermal fuse. Unscrew it. Remove the old thermal fuse. Insert a new thermal fuse. Put the CEDC board and the cover back in place.

Test the operation of the damper blade!

1

2

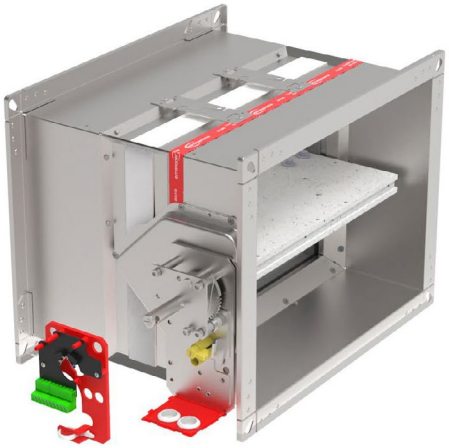

3

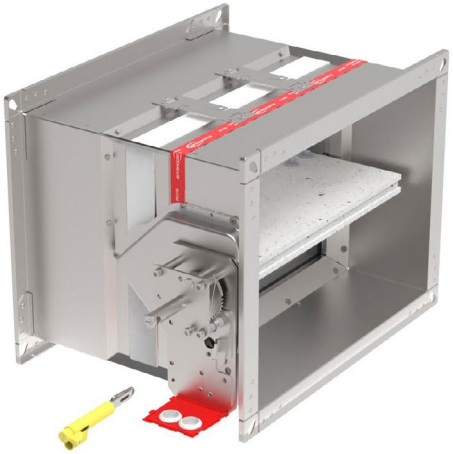

4

* The images shown are for illustration purposes only and may not be an exact representation of the product.

UPGRADE TO ELECTRIC ACTUATOR Manual R25 <-> Belimo

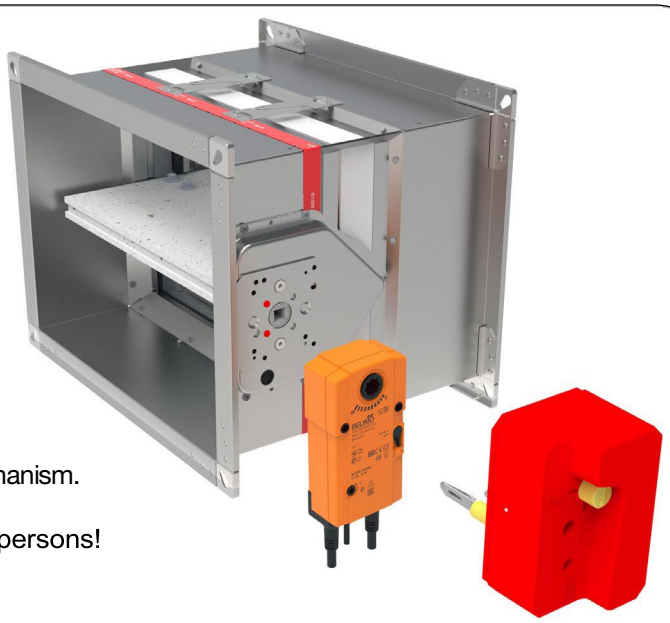

100x200 to 800x600

The blade must be closed before replacement the mechanism.

Service work may only be performed by authorized persons!

NOTE: Use kit according to table (upgrade to electric actuator)! * Before replacing the mechanism, the damper blade must be closed.
* Find the screw and remove the cover!

1. Find the 2 hex screws located on the board of mechanism, unscrew them and remove manual mechanism.
2. Find the 2 hex screws located on the mechanism (E), unscrew them and replace the manual mechanism plate (A) with BE transition plate (B) provided in the kit. NOTE: Pay attention to the position of indication cut on the BE transition plate.
3. Insert the rubber plug into the opening for the thermal fuse. Install square shaft into the hole, put Belimo actuator on the shaft and fasten the actuator with screws (2 hexagon screws M6x55). *Check the rotation direction of the actuator! (Clockwise actuation, R mark on the actuator)
4. Drill hole (ø16 mm) for the fuse of Belimo mechanism and fix it with self-tapping screws.

NOTE: Install the thermal fuse in a place where it will not interfere with the operation of the damper blade !
Test the operation of the damper blade!

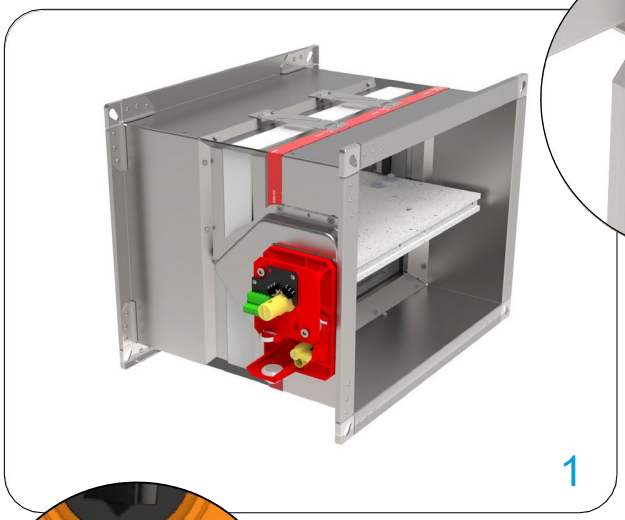

1

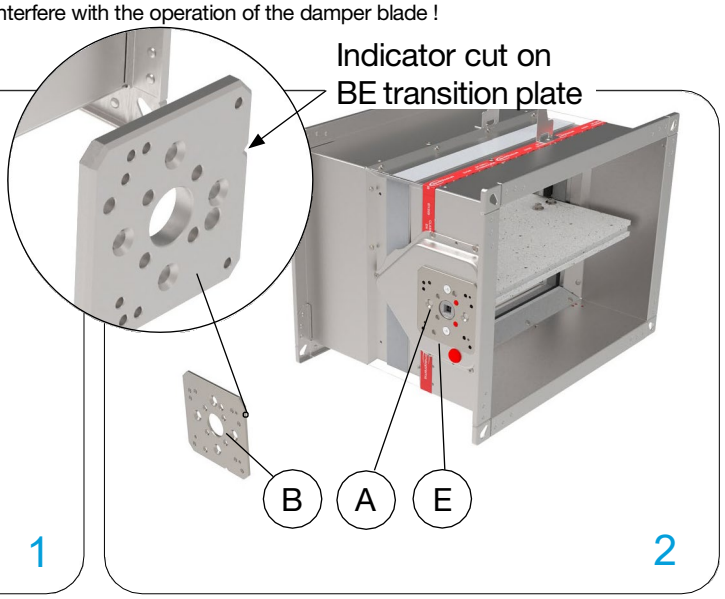

2

3

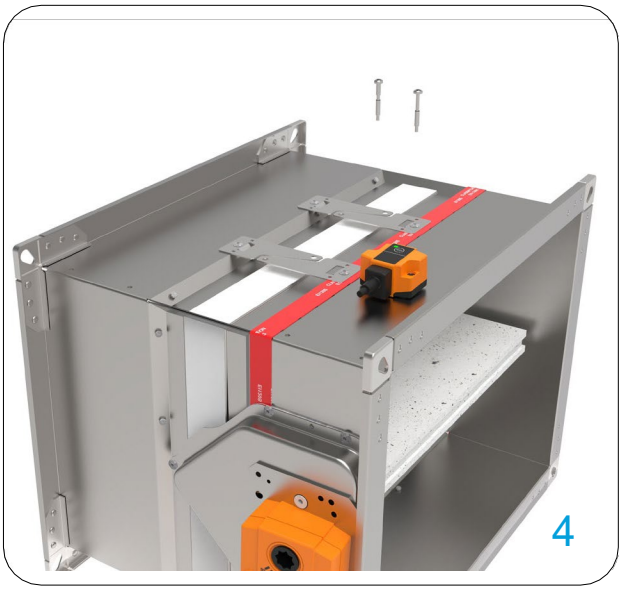

4

* The images shown are for illustration purposes only and may not be an exact representation of the product.

UPGRADE TO ELECTRIC ACTUATOR Manual R40 <-> Belimo

800x600 to 1500x800

The blade must be closed before replacement the mechanism.
Service work may only be performed by authorized persons!

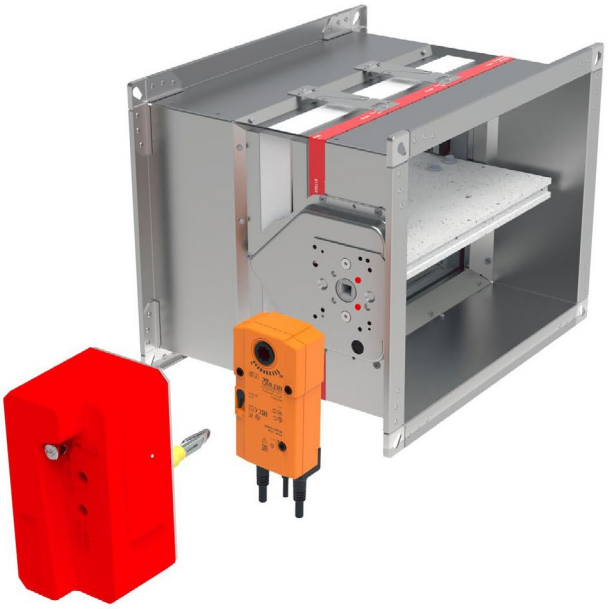

NOTE: Use kit according to table (upgrade to electric actuator)! * Before replacing the mechanism, the damper blade must be closed.
* Find the screw and remove the cover!

1. Find the 3 hex screws located on the board of mechanism, unscrew them and remove manual mechanism.
2. Find the 2 hex screws located on the mechanism (E), unscrew them and replace the manual mechanism plate (A) with BE transition plate (B) provided in the kit. NOTE: Pay attention to the position of indication cut on the BE transition plate.
3. Insert the rubber plug into the opening for the thermal fuse. Install square shaft into the hole, put Belimo actuator on the shaft and fasten the actuator with screws (2 hexagon screws M6x55). *Check the rotation direction of the actuator! (Clockwise actuation, R mark on the actuator)
4. Drill hole (ø16 mm) for the fuse of Belimo mechanism and fix it with self-tapping screws.

NOTE: Install the thermal fuse in a place where it will not interfere with the operation of the damper blade !
Test the operation of the damper blade!

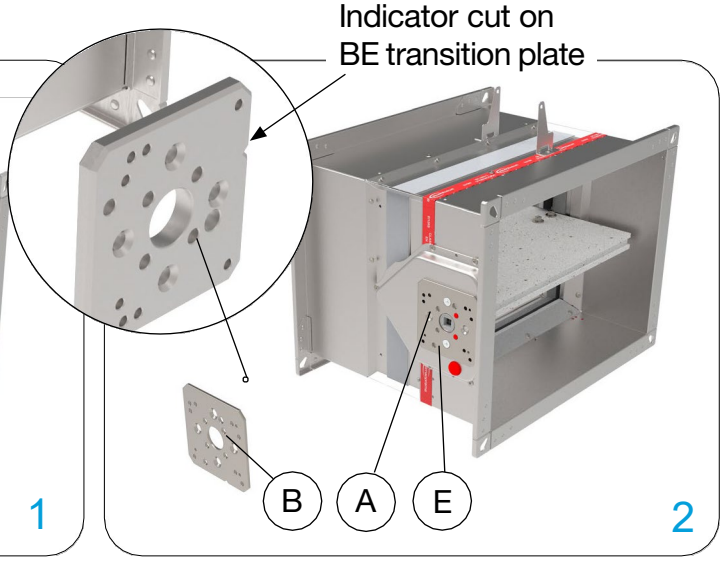

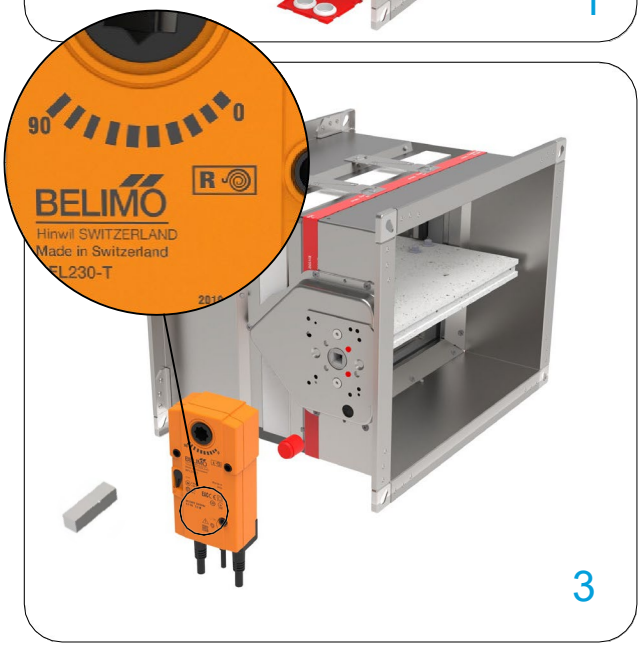

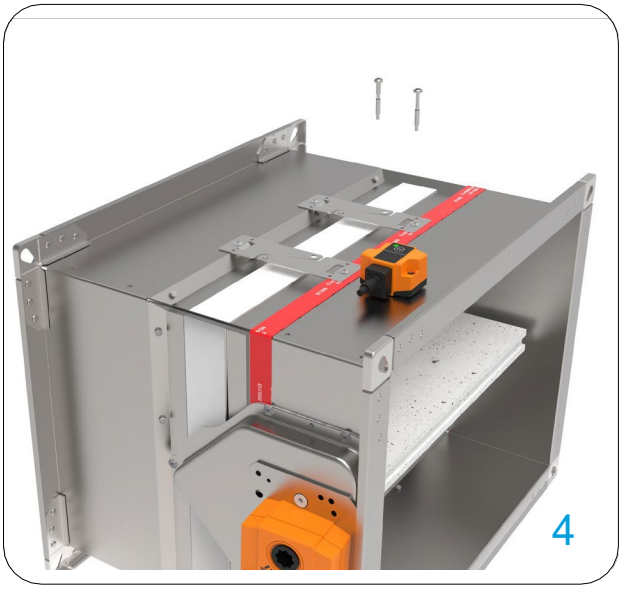

* The images shown are for illustration purposes only and may not be an exact representation of the product.

HOW TO ROTATE ELECTRIC ACTUATOR

(Belimo)

100x200 to 1500x800

The blade must be closed before replacement the mechanism.

ERK Kit (FD-A-ERK)

- transition plate
- rectangular shaft
- 2x screws M6x30

1) Locate the 2 hex screws, unscrew and remove actuator.
2) Remove FA transition plate and rectangular shaft.
3) Insert new transition plate and rectangular shaft from ERK kit.

NOTE A Pay attention to the position of the indicator cut!
B Pay attention to the indicator cut, insert the ERK rectangular shaft that a smaller portion of the shaft enters ERK transition plate!

4) Fix the transition plate to the transition board and install the Belimo actuator.

Test the operation of the damper blade!

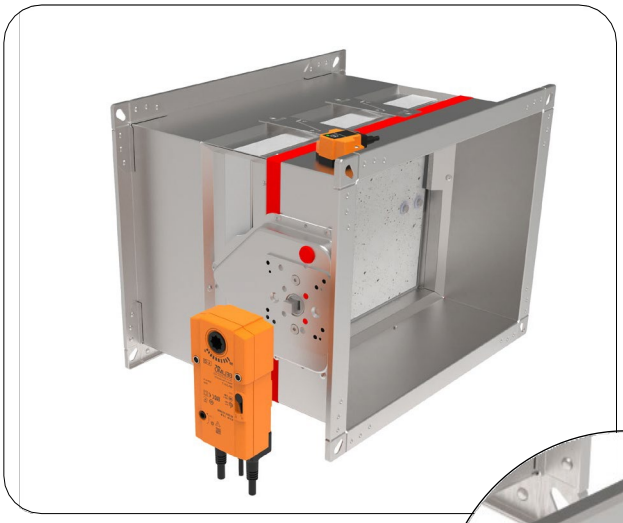

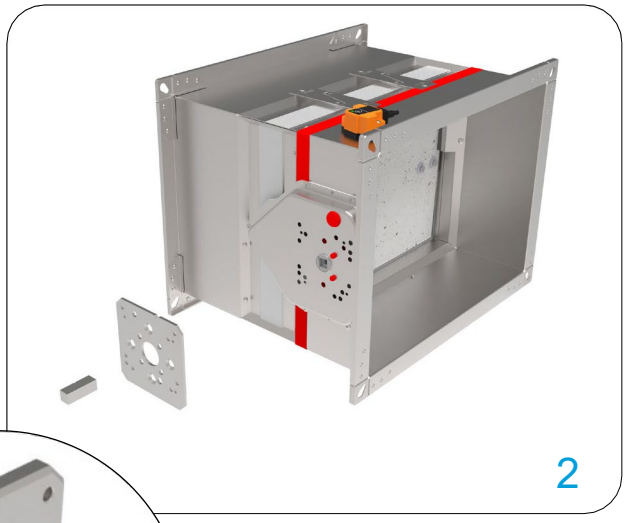

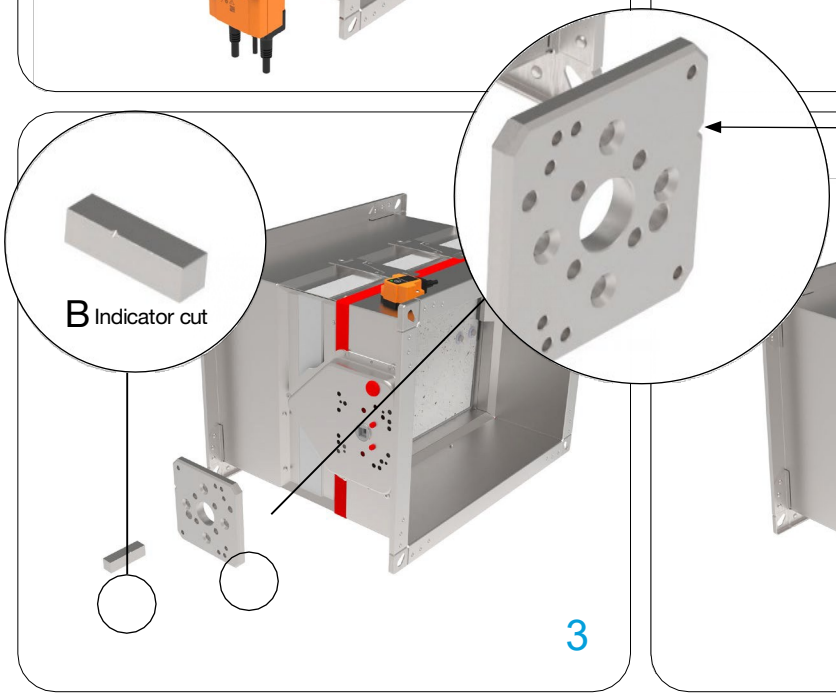

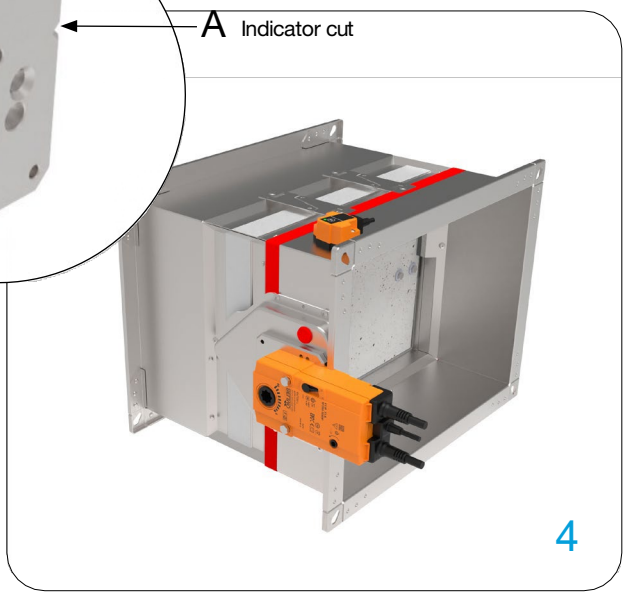

* The images shown are for illustration purposes only and may not be an exact representation of the product.

FIRE DAMPER TESTING

MANUAL ACTUATORS/ SOLENOID ACTUATOR

1. Close the damper blade by pushing the thermic actuator through the hole on the casing.

2. Open the damper blade by inserting the metal rod (i.e. screwdriver, hex wrench) max. 7 mm in diameter, into the yellow/ silver part and rotate the arrow to the open position.

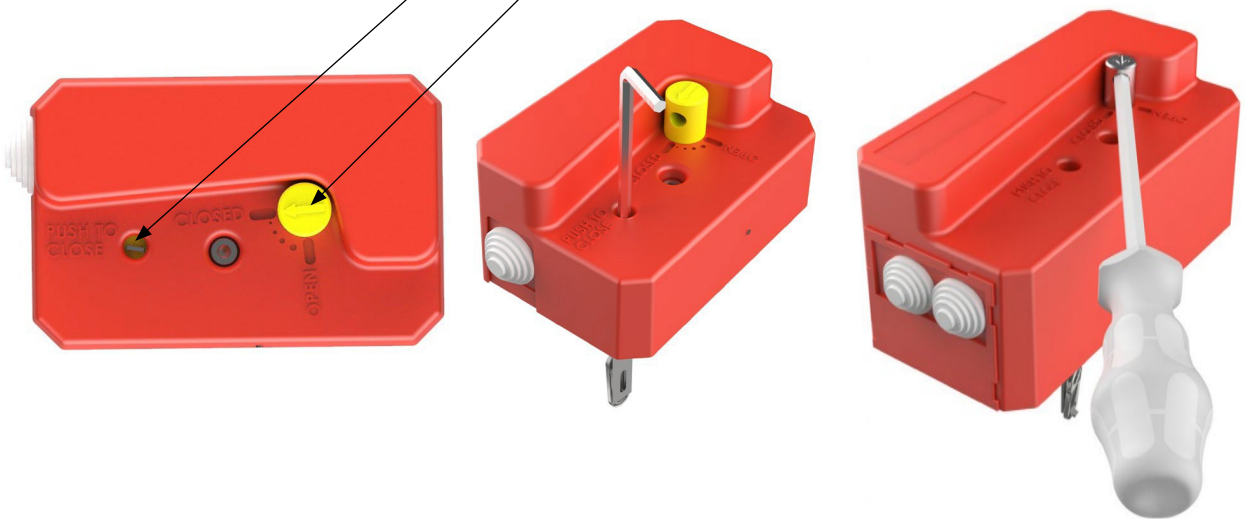

ELECTRIC ACTUATOR

1. Test the operation of the damper blade by pushing the test button.

2. Opening the damper blade:
Insert the handle provided with the Belimo actuator into the hole. Rotate it as shown on the actuator.

* The images shown are for illustration purposes only and may not be an exact representation of the product.

MAINTENANCE AND OPERATION

Fire dampers are designed with fully enclosed drive mechanism outside of the duct and as such do not require cleaning and regular maintenance.
However, fire dampers should be part of the routine cleaning and maintenance of the ventilation system.

Provide periodic inspection in accordance with the requirements of the law or by the building regulations or other local regulations.
In the absence of specific regulations, it is recommended to carry out the following control activities at intervals of no more than every 12 months:

Check access to the fire damper. Confirm that internal and external components of the fire damper are easily accessible.

Inspect the servomotor electrical wiring for any signs of damage (where applicable), check if the electrical terminals are tightened.

Inspect the end-switch wiring for damage (where applicable), check if the electrical terminals are tightened.

Check the fire damper for damage, examine the condition of the damper blades and seals, report if necessary.

Check the cleanliness of the damper and clean if necessary.

TRANSPORT

After arrival, check the fire damper for transport damage and shortcomings. In case of any damage or shortcomings, immediately contact your supplier.

STORAGE

If the damper is not installed immediately:

- Remove any wrapping.
- Protect fire damper from dust and contamination. Do not expose the fire damper to the effects of weather - store fire damper in a dry place.
- Do not store the unit below -20 °C or above 50 °C.

Please properly dispose of packaging material!

FUNCTIONAL TESTS

During normal operation, the damper blade remains open. The functional test consists of closing the damper blade and then reopening it.
According to EN 15650, a functional test should be performed at least every six months. If two tests in a row are successful, the next test can be performed a year later.

Verify correct manual opening and closing of the fire damper in accordance with the technical manual, testing procedure for different mechanisms is shown on a pg. 64.

Test the damper's opening and closing functions when controlled by the fire alarm system (if applicable)

Check the operation of the end switches in both open and closed positions, adjust and report as required

Ensure the damper performs its intended function as part of the control system (where applicable);

Confirm that the damper is returned to its normal operating position, typically the open position.

The functional test must be carried out in compliance with the basic maintenance principles of the European norms EN 13306, EN 15423 and EN15650.

COMMISSIONING

1) Carefully unpack FD fire damper - be careful of sharp edges and do not use excessive force for unpacking
2) Inspect the fire damper - check the fire damper for damage
3) Installation of the fire damper - according to the installation instructions.
4) Before commissioning: check the fire damper functions

CLEANING

May be cleaned with a sponge, with water
or a mild detergent. Take precaution if using disinfectant (desinfectant may contain alcohol which is flammable, take precaution to avoid ignition)

* The images shown are for illustration purposes only and may not be an exact representation of the product.

actionair by Swegon

Joseph Wilson Industrial Estate, Whitstable, CT5 3DU UK
+44 (0) 1634 981400
actionair@swegon.com
www.swegon.com/uk/