LOCUS a

Bruksanvisning

2024-08-14

Innehåll

Symbolförklaring 1
Användningsområde 2
Allmänt 2
Skyddsutrustning 2
Elektrisk säkerhet 2
Hantering 2
Installation 2

Standarder och direktiv 2

Montering 3

Mått 3

Inkoppling 4

Modbus 4
Drifttagning 4
Användarläge 5

Tekniska data 5

Anslutning 5
Ingående delar 5

Parameter och Modbusregister 6

Modbusregister för VAV-regulator 1.57 (URC) . 9

Felsökning 18

Larmlista för VAV regulator (URC) 18

Symbolförklaring

Symboler på maskinen

Denna produkt överensstämmer med gällande EU-direktiv.

CE

Symboler i bruksanvisningen

Varning/Observera!



Dokumentets ursprungsspråk är svenska

Swegon

Användningsområde

LOCUS är en börvärdesomställare med inbyggd temperaturgivare som används för att öka eller minska börvärdestemperaturen. Den visar även luftflöden, tryck, VOC CO2 samt larm och kan användas som konfigureringsverktyg vid driftsättning.

Produkten får ej användas till annat än avsedd användning.

Allmänt

Läs igenom hela bruksanvisningen innan produkten installeras/används och spara den för framtida referens. Det är inte tillåtet att göra ändringar eller modifieringar på denna produkt utöver dem som framgår i detta dokument.

Skyddsutrustning

Använd alltid, för ändamålet, lämplig personlig skyddsutrustning i form av handskar, andningsskydd och skyddsglasögon vid hantering, installation, rengöring och service/underhåll.

Elektrisk säkerhet

Tillåten spänning, se ”Elektriska data”. Det är inte tillåtet att föra in främmande föremål i produktens kontaktdon eller elektronikens ventilationsöppningar, risk för kortslutning.

Kabelklassning:

Följ alltid de lokala/nationella regler för vem som får utföra denna typ av elinstallation.

Hantering

- Produkten skall hanteras varsamt.

Installation

- Fuktig, kall och aggressiv miljö ska undvikas.
- Undvik att montera produkten nära värmekällor.
- Montera produkten enligt gällande branschregler.
- Montera produkten för lätt åtkomst vid service/underhåll.
- Om produkten monteras ovan fast undertak måste inspektionslucka finnas så att produkten är tillgänglig för inspektion.
- Kontrollera att produkten inte har några synliga skador.
- Kontrollera att produkten sitter ordentligt fast efter att den är monterad.
- Kontrollera att allt kablage sitter fast ordentligt efter att det är monterat.

Standarder och direktiv

Följande standarder har använts:

EC direktiv:	93/68/EEC
Lågspänningsdirektiv:	2014/35/EU
Maskindirektiv:	2006/42/EEC
EMC-firektiv:	2014/30/EU
RoHs direktiv:	2002/95/EC
Vibration:	EN-60721-3-3

Se även:

LOCUS produktblad

LOCUS användarmanual

Montering

LOCUS monteras lämpligast mellan 1,5 till 1,8 m över golvet på väggytan i standardiserat inpassad monteringsdosa, se figur 1.

Produkten kan monteras på toppen av en anslutningsbox (infälld montering). LOCUS är mekaniskt utformad för att passa de vanliga 55x55 mm ramarna (Schneider Exxact, Merten, Gira, Elko etc.).

Monteringsposition behöver väljas noggrant för att eliminera felfaktorer som kan påverka mätningen.

Rumsenheten bör exempelvis inte utsättas för:

- direkt solljus
- avstånd från användaren
- luftflöde från fönster eller dörrar
- luftflöde från ventilationsmunstycken
- luftflöde igenom apparatdosan
- kallras som orsakas av en yttervägg

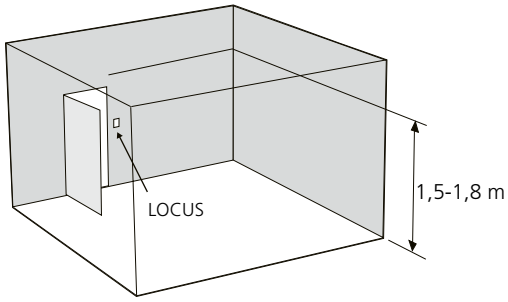

Figur 1. Rekommenderat montage i rum.

Mått

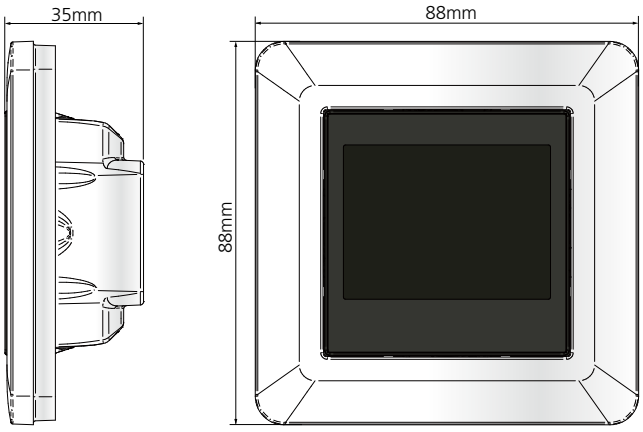

Figur 2. Mått, LOCUS.

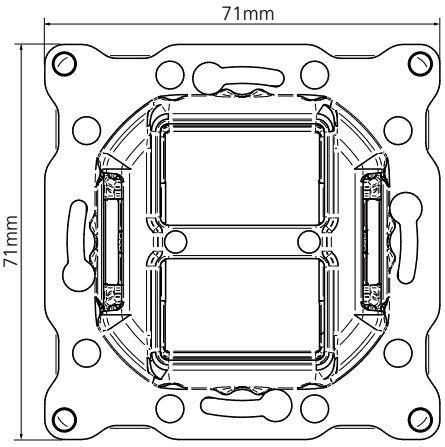

Figur 3. Mått, LOCUS monteringsfäste.

Inkoppling

LOCUS ansluts till regulator URC1 med hjälp av RJ12.

Slavslingan, port 24 eller 25.



Figur 4. Rumsenhet LOCUS.

Modbus

ModBusinställningar/Egenskaper

ID:	247
Protokoll:	RS-485 Modbus RTU
Bushastighet/Baudrate:	38400 bit/s
Databitar:	8
Paritet:	ingen
Stoppbitar:	1

Konfigurering kan göras via LOCUS-panelen genom att gå till ”Parameters” menyn.

Där kommer man åt samtliga modbusinställningar för URC regulatorn.

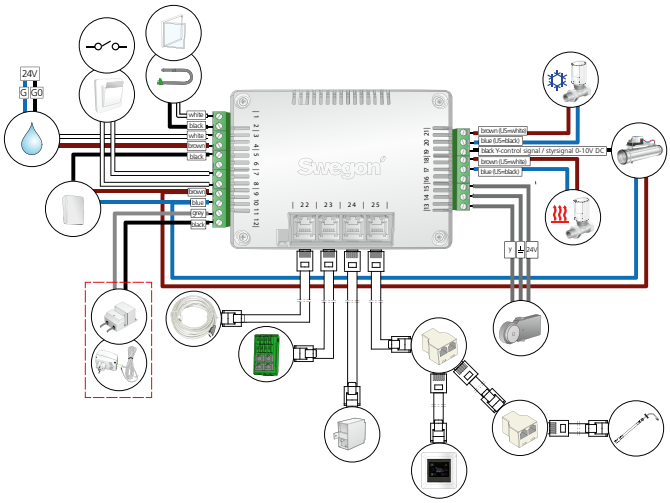

Figur 5. Regulator URC1.

Drifttagning

OBS! Kontrollera alla inställningar och parametrar under drifttagningen. På så sätt kan du garantera att vald tillämpning fungerar korrekt.

Användarläge

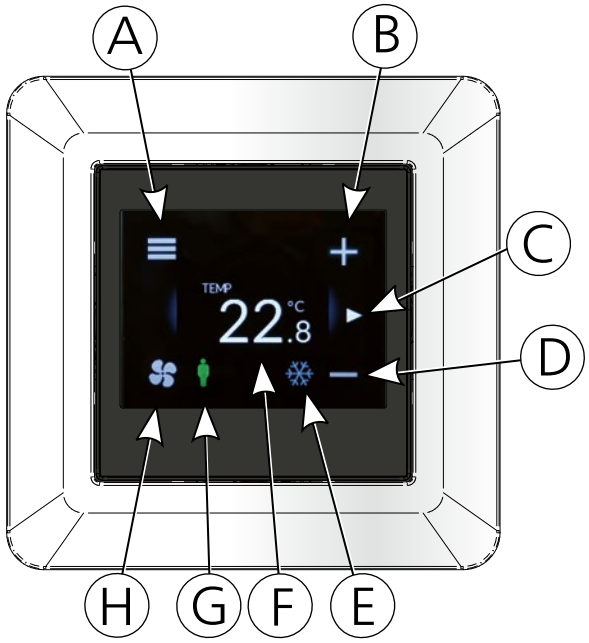

A. meny
B. öka
C. svajpa vänster för att gå till nästa sida
D. minska
E. symbol som visar pågående kylning eller värmning
F. visar inställt börvärde alt. uppmätt temperatur
G. visar närvaro i rummet
H. tryck för att aktivera boost flöde

Tekniska data

Display	Kapacitiv touch TFT Display QVGA 2.3”
Skärmupplösning	320 x 240
Kommunikation	Modbus RTU via RS-485
Temperaturgivare	Intern 10K NTC -sensor
Driftstemperatur	+5 ... +40°C
Skyddklass	IP20
Mått	88 x 88 x 35 mm
Driftsspänning	12-40 VDC
Strömbehov	0.5 W

Anslutning

LOCUS	Anslutning	Beskrivning
VDD	RJ 12	12-40 VDC strömmatning
A+	RJ 12	RS-485 bussanslutning
B-	RJ 12	RS-485 bussanslutning
GND	RJ 12	Jord för 12-40 VDC strömmatning
Minneskortsplats		Användarpanelens programvara är möjlig att uppdatera via Micro sd-kort

Ingående delar

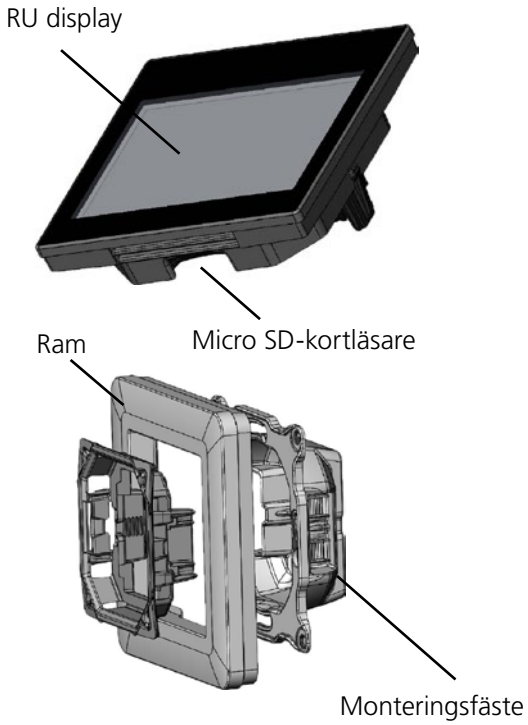

Parameter och Modbusregister

Märk följande parametrar:

Display	Beskrivning	Förklaring
	Display in stand by mode	Activated by clicking on the display
	Display i stand-by läge	Aktiveras genom att klicka på displayen
	Main screen active	the + and – signs increases/decreases the setpoint temperature
	Aktiv huvudmeny	+ och – tecknen ökar/minskar börvärdestemperaturen
	Boost mode enabled	
	Boost-läge aktiverat	
	Swipe left for display mode two	Show input values from connected sensors
	Svajpa vänster för andra display-läget	Visar värden från anslutna sensorer
	Swipe right for display main screen	
	Svajpa höger för att gå till huvudmenyn	
Huvudmeny		
	Settings menu	Code 1919
	Inställningsmenyn	Kod 1919
	Main menu	
	Huvudmeny	
Displayinställningar		
	Backlight	Brightness in display
	Bakgrundsljus	Inställning av displayens ljus
	Main screen boost	Make boost button available
	Huvudmeny, boost	Göra boost-knapp tillgänglig
	Main screen alarms	Show alarms symbol
	Huvudmeny, alarm	Visar alarmsymbol

Rätten till konstruktionsändringar förbehålls.

Display inställningar		
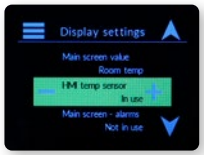	HMI temp sensor use	Use of the units internal tempsensor (LOCUS)
	HMI temp. sensor användning	Användning av intern temp. sensor (LOCUS)
	Main screen value	What to show on main screen
	Huvudskärm värde	Vilka värden som visas på huvudskärmen
	Stand by screen	What to show on stand by screen
	Standby-skärm	Vad som visas på standby-skärmen
Modbusinställningar		
	Modbus settings	For communication with controller unit LOCUS
	Inställning av Modbus	För kommunikation till kontrollenhet LOCUS
	Modbus ID	ID for LOCUS unit (247) (may not be changed)
	Modbus ID	ID för LOCUS (247) (får inte ändras)
	Stop bits	No of stop bits (1)
	Stoppbitar	Antal stoppbitar (1)
	Parity	Choose parity (None)
	Paritet	Välj paritet (None)
	Data bits	No of data bits (8)
	Databitar	Antal databitar (8)
	Baudrate	Communication speed (38400)

Parameter		
	Parameters	Modbus list
	Parameter	Modbuslista
	Parameter menu	Choose modbus register
	Parametermeny	Välj Modbusregister (Se parameterlista sid 9)
	Quick settings	Short cut for the most common parameters
	Snabbvalsmeny	Genväg till de vanligaste parameterna
Huvudmeny		
	Thermostat settings	Use of temperature sensors
	Termostatinställningar	Användning av temperaturgivare
	Temp. Calibration	Offset of measured value
	Temperaturcalibrering	Offset av uppmätt värde
Huvudmeny		
	Information	SW version
	Information	Mjukvaruversion

Modbusregister för VAV-regulator 1.57 (URC)

Coil						
ID	**Name**	**Min**	**Max**	**Init**	**Settings**	**Description**
0x0001	Emergency	0	1	0		Emergency mode
0x0002	BOOT (first write parameters)	0	1	0		BOOT (first write parameters)
0x0003	Force parameter write	0	1	0		Force parameter write
0x0004	Clear all alarms	0	1	0		Clear all alarms
0x0005	Holiday	0	1	0		Holiday mode
0x0006	SNC	0	1	0		Summer night cooling mode
0x0007	Zero calibration demand to pressure sensor	0	1	0		Zero calibration
0x0008	Man valve test	0	1	0		Manual valve test
0x0009	Man vent boost	0	1	0		Manual ventilation boost
0x0010	Reset temperature offset.	0	1	0		Reset temperature offset
0x0011	Water actuator STOP	0	1	0		Water actuator STOP
0x0012	Air quality active UnOcc	0	1	0		Air quality regulation active in unoccupancy mode
0x0013	Group occupancy	0	1	0		Occupancy from group
0x0014	Cold draft protection active in unoccupancy	0	1	0		Cold draft protection active in unoccupancy mode
0x0015	Slave bus reset	0	1	0		Slave bus reset
0x0016	Reset VOC reset counter	0	1	0		Reset VOC reset counter
Input status						
ID	**Name**	**Min**	**Max**	**Init**	**Settings**	**Description**
1x0001	AC power supply.	0	1	0		AC power supply
1x0002	Discrete air hatch open (fixed)	0	1	0		Discrete air hatch open (fixed)
1x0003	Discrete air hatch open (pulsing)	0	1	0		Discrete air hatch open (pulsing)
1x0004	Discrete air hatch Parasol slave	0	1	0		Discrete air hatch Parasol slave
1x0005	Air flow forced	0	1	0		Air flow forced
1x0006	Vent boost active	0	1	0		Ventilation boost active
1x0007	Valve exercise active	0	1	0		Valve exercise active
1x0008	Condensation	0	1	0		Condensation state
1x0009	Digital in (IN4)	0	1	0		Digital in (IN4) state
1x0010	Window open	0	1	0		Window open
1x0011	Occupancy incl delays	0	1	0		Occupancy including delays
1x0012	Occupancy SM 1	0	1	0		Occupansy sensor module 1
1x0013	Occupancy SM 2	0	1	0		Occupansy sensor module 2
1x0014	Occupancy SM 3	0	1	0		Occupansy sensor module 3
1x0015	Occupancy SM 4	0	1	0		Occupansy sensor module 4
1x0016	Occupancy SM 5	0	1	0		Occupansy sensor module 5
1x0017	Occupancy SM 6	0	1	0		Occupansy sensor module 6
1x0018	Occupancy SM 7	0	1	0		Occupansy sensor module 7
1x0019	Occupancy SM 8	0	1	0		Occupansy sensor module 8
1x0020	Occupancy SM 9	0	1	0		Occupansy sensor module 9
1x0021	Occupancy SM 10	0	1	0		Occupansy sensor module 10
1x0022	Change over Heat present	0	1	0		Change over hot water present
1x0023	Change over Cool present	0	1	0		Change over cold water present
1x0024	Digital out 1 status	0	1	0		Digital out 1 status
1x0025	Digital out 2 status	0	1	0		Digital out 2 status
1x0026	Digital out 3 status	0	1	0		Digital out 3 status

Input status						
ID	**Name**	**Min**	**Max**	**Init**	**Settings**	**Description**
1x1000	Sum alarm for functional alarms	0	1	0		Sum alarm for functional alarms
1x1001	Sum alarm for comfort alarms	0	1	0		Sum alarm for comfort alarms
1x1002	Supply voltage low	0	1	0		Supply voltage low
1x1003	Supply voltage critical low	0	1	0		Supply voltage critical low
1x1004	Ext temp missing	0	1	0		External temperature missing
1x1005	Ext temp error	0	1	0		External temperature error
1x1006	Condensation sensor error	0	1	0		Condensation sensor error
1x1007	SM temp sensor error	0	1	0		Sensor module temperature error
1x1008	SM button error	0	1	0		Sensor module button error
1x1009	CO2 sensor missing	0	1	0		CO2 sensor missing
1x1010	VOC Error	0	1	0		VOC Error
1x1011	Low pressure	0	1	0		Low pressure
1x1012	-- Not used -- Alarm 11	0	1	0		-- Not used -- Alarm 11
1x1013	-- Not used -- Alarm 12	0	1	0		-- Not used -- Alarm 12
1x1014	-- Not used -- Alarm 13	0	1	0		-- Not used -- Alarm 13
1x1015	-- Not used -- Alarm 14	0	1	0		-- Not used -- Alarm 14
1x1016	-- Not used -- Alarm 15	0	1	0		-- Not used -- Alarm 15
1x1017	-- Not used -- Alarm 16	0	1	0		-- Not used -- Alarm 16
1x1018	SM comm error	0	1	0		Sensor module communication error
1x1019	Slave comm error	0	1	0		Slave communication error
1x1020	Pressure sensor comm error	0	1	0		Pressure sensor comm error
1x1021	VOC sensor comm error	0	1	0		VOC sensor communication error
1x1022	No master request (slave)	0	1	0		No master request (slave)
1x1023	Slave incompatible version	0	1	0		Slave incompatible version
1x1024	-- Not used -- Alarm 23	0	1	0		-- Not used -- Alarm 23
1x1025	-- Not used -- Alarm 24	0	1	0		-- Not used -- Alarm 24
1x1026	Heating comfort alarm	0	1	0		Heating comfort alarm
1x1027	Cooling comfort alarm	0	1	0		Cooling comfort alarm
1x1028	Temp. Set point overlap alarm	0	1	0		Temperature setpoint overlap alarm
1x1029	Air quality comfort alarm	0	1	0		Air quality comfort alarm
1x1030	Condensation	0	1	0		Condensation
1x1031	-- Not used -- Alarm 30	0	1	0		-- Not used -- Alarm 30
1x1032	-- Not used -- Alarm 31	0	1	0		-- Not used -- Alarm 31
1x1033	-- Not used -- Alarm 32	0	1	0		-- Not used -- Alarm 32
1x1034	24 V Out 1 overload error	0	1	0		24 V Output 1 overload error
1x1035	24 V Out 2 overload error	0	1	0		24 V Output 2 overload error
1x1036	24 V Out 3 overload error	0	1	0		24 V Output 3 overload error
1x1037	-- Not used -- Alarm 36	0	1	0		-- Not used -- Alarm 36
1x1038	-- Not used -- Alarm 37	0	1	0		-- Not used -- Alarm 37
1x1039	-- Not used -- Alarm 38	0	1	0		-- Not used -- Alarm 38
1x1038	-- Not used -- Alarm 37					-- Not used -- Alarm 37
1x1039	-- Not used -- Alarm 38					-- Not used -- Alarm 38
1x1040	-- Not used -- Alarm 39	0	1	0		-- Not used -- Alarm 39
1x1041	-- Not used -- Alarm 40	0	1	0		-- Not used -- Alarm 40
1x1042	Slave input sum alarm	0	1	0		Slave input sum alarm
1x1043	Slave output sum alarm	0	1	0		Slave output sum alarm
1x1044	-- Not used -- Alarm 43	0	1	0		-- Not used -- Alarm 43
1x1045	-- Not used -- Alarm 44	0	1	0		-- Not used -- Alarm 44
1x1046	-- Not used -- Alarm 45	0	1	0		-- Not used -- Alarm 45
1x1047	-- Not used -- Alarm 46	0	1	0		-- Not used -- Alarm 46
1x1048	-- Not used -- Alarm 47	0	1	0		-- Not used -- Alarm 47
1x1049	-- Not used -- Alarm 48	0	1	0		-- Not used -- Alarm 48

Input status						
ID	**Name**	**Min**	**Max**	**Init**	**Settings**	**Description**
1x1050	-- Not used -- Alarm 49	0	1	0		-- Not used -- Alarm 49
1x1051	-- Not used -- Alarm 50	0	1	0		-- Not used -- Alarm 50
1x1052	-- Not used -- Alarm 51	0	1	0		-- Not used -- Alarm 51
1x1053	-- Not used -- Alarm 52	0	1	0		-- Not used -- Alarm 52
1x1054	-- Not used -- Alarm 53	0	1	0		-- Not used -- Alarm 53
1x1055	-- Not used -- Alarm 54	0	1	0		-- Not used -- Alarm 54
1x1056	-- Not used -- Alarm 55	0	1	0		-- Not used -- Alarm 55
1x1057	-- Not used -- Alarm 56	0	1	0		-- Not used -- Alarm 56
1x1058	-- Not used -- Alarm 57	0	1	0		-- Not used -- Alarm 57
1x1059	-- Not used -- Alarm 58	0	1	0		-- Not used -- Alarm 58
1x1060	-- Not used -- Alarm 59	0	1	0		-- Not used -- Alarm 59
1x1061	-- Not used -- Alarm 60	0	1	0		-- Not used -- Alarm 60
1x1062	-- Not used -- Alarm 61	0	1	0		-- Not used -- Alarm 61
1x1063	-- Not used -- Alarm 62	0	1	0		-- Not used -- Alarm 62
1x1064	-- Not used -- Alarm 63	0	1	0		-- Not used -- Alarm 63
1x1065	-- Not used -- Alarm 64	0	1	0		-- Not used -- Alarm 64
Input register						
ID	**Name**	**Min**	**Max**	**Init**	**Settings**	**Description**
3x0001	Component Name ID	0	32767	19		Component name ID
3x0002	Bootloader revision	0	32767	0		Bootloader revision number
3x0003	SW revision	0	32767	157		Software revision number
3x0004	HW revision	0	15	0		Hardware revision number
3x0005	Serial number 1	-32768	32767	0		Serial number
3x0006	Serial number 2	-32768	32767	0		Serial number
3x0007	Serial number 3	-32768	32767	0		Serial number
3x0008	Serial number 4	-32768	32767	0		Serial number
3x0009	Serial number 5	-32768	32767	0		Serial number
3x0010	Serial number 6	-32768	32767	0		Serial number
3x0011	Serial number 7	-32768	32767	0		Serial number
3x0012	Serial number 8	-32768	32767	0		Serial number
3x0018	Application id	0	32767	15		Application ID
3x0020	Number of connected sensor modules.	0	10	0		Number of connected sensor modules.
3x0021	Number of connected slaves	0	9	0		Number of connected slaves
3x0022	Occupancy SM (bit code)	0	1023	0		Occupancy sensor module in bit code
3x0023	Output current	0	10000	0		Actual output current
3x0024	Pressure	-4000	25000	0		Actual pressure value
3x0025	CO2 ppm	0	2000	0		Actual CO2 ppm value
3x0026	VOC ppm	0	2000	0		Actual VOC ppm value
3x0027	RH %	0	10000	0		Actual Relative humidity value (%)
3x0028	Temperature from VOC sensor	-5000	8000	0		Actual temperature value from VOC sensor
3x0029	Input status mirror	-32768	32767	0		Input status mirror
3x0030	Input status mirror	-32768	32767	0		Input status mirror
3x0031	Supply voltage	0	32767	0		Actual suply voltage

Input register						
ID	**Name**	**Min**	**Max**	**Init**	**Settings**	**Description**
3x0032	Device state	0	11	0	"0=Not initiated yet, 1=Device is starting up, 2=Occupied, 3=Unoccupied, 4=Holiday, 5=Valve exercise, 6=Summer night cool, 7=Commissioning, 8=Slave, 9=Emergency, 10=Stop state (used when an alarm forces the regulator to stop), 11=Open Window"	Actual device state

Input register						
ID	**Name**	**Min**	**Max**	**Init**	**Settings**	**Description**
3x0033	Actual mean airflow.	0	32767	0		Actual mean airflow value
3x0034	Temp Ext	-5000	8000	0		Actual temperature value external
3x0035	Condensation	0	1	0		Condensation state
3x0036	Alarm 1-16	-32768	32767	0		Alarm 1-16
3x0037	Alarm 17-32	-32768	32767	0		Alarm 17-32
3x0038	Alarm 33-48	-32768	32767	0		Alarm 33-48
3x0039	Alarm 49-64	-32768	32767	0		Alarm 49-64
3x0040	Slave id for first Slave active alarm	0	10	0		Slave id for first Slave active alarm
3x0041	SM id for first SM active alarm	0	10	0		Sensor module id for first sensor module active alarm
3x0042	Alarm 1-16 history	-32768	32767	0		Alarm 1-16 history
3x0043	Alarm 17-32 history	-32768	32767	0		Alarm 17-32 history
3x0044	Alarm 33-48 history	-32768	32767	0		Alarm 33-48 history
3x0045	Alarm 49-64 history	-32768	32767	0		Alarm 49-64 history
3x0046	Analog input (IN3)	0	100	0		Actual value analog input (IN3)
3x0047	Digital output 1.	0	10000	0		Digital output 1 state
3x0048	Digital output 2.	0	10000	0		Digital output 2 state
3x0049	Digital output 3.	0	10000	0		Digital output 3 state
3x0050	Analogue output 1.	0	10000	0		Analog output 1 value
3x0051	Analogue output 2.	0	10000	0		Analog output 2 value
3x0052	Analogue output 3.	0	10000	0		Analog output 3 value
3x0053	Room temp	-5000	8000	2000		Actual room temperature
3x0054	Room temp set point	-5000	8000	2200		Actual room temperature setpoint
3x0055	Temp Low limit	0	10000	0		Temperature low limit
3x0056	Temp Hi limit	0	10000	0		Temperature high limit
3x0057	Temp load	-10000	10000	0		Actual temperature load
3x0058	Temp set point offset Occ	-1200	1200	0		Temperature setpoint offset occupancy mode
3x0059	Sensor module set point offset	-3	3	0		Actual temperature offset from sensor module
3x0060	Temp Slave controller 1	-5000	8000	0		Actual temperature slave controller 1
3x0061	Temp Slave controller 2	-5000	8000	0		Actual temperature slave controller 2
3x0062	Temp Slave controller 3	-5000	8000	0		Actual temperature slave controller 3
3x0063	Temp Slave controller 4	-5000	8000	0		Actual temperature slave controller 4
3x0064	Temp Slave controller 5	-5000	8000	0		Actual temperature slave controller 5
3x0065	Temp Slave controller 6	-5000	8000	0		Actual temperature slave controller 6
3x0066	Temp Slave controller 7	-5000	8000	0		Actual temperature slave controller 7
3x0067	Temp Slave controller 8	-5000	8000	0		Actual temperature slave controller 8
3x0068	Temp Slave controller 9	-5000	8000	0		Actual temperature slave controller 9
3x0069	Temp SM1	-5000	8000	0		Actual temperature sensor module 1
3x0070	Temp SM2	-5000	8000	0		Actual temperature sensor module 2
3x0071	Temp SM3	-5000	8000	0		Actual temperature sensor module 3
3x0072	Temp SM4	-5000	8000	0		Actual temperature sensor module 4
3x0073	Temp SM5	-5000	8000	0		Actual temperature sensor module 5
3x0074	Temp SM6	-5000	8000	0		Actual temperature sensor module 6
3x0075	Temp SM7	-5000	8000	0		Actual temperature sensor module 7
3x0076	Temp SM8	-5000	8000	0		Actual temperature sensor module 8
3x0077	Temp SM9	-5000	8000	0		Actual temperature sensor module 9
3x0078	Temp SM10	-5000	8000	0		Actual temperature sensor module 10
3x0079	Air flow load	0	10000	0		Actual airflow load signal
3x0080	Air flow set point	0	32767	0		Actual airflow setpoint
3x0081	Air flow moving average	0	32767	0		Air flow moving average
3x0082	Air quality load	0	10000	0		Actual air quality load signal
3x0083	Air quality	0	2000	0		Actual air quality
3x0084	Damper signal	0	10000	0		Damper signal
3x0085	Airflow control signal	0	10000	0		Airflow control signal

Input register						
ID	**Name**	**Min**	**Max**	**Init**	**Settings**	**Description**
3x0086	Air flow Slave controller 1	0	32767	0		Actual airflow slave controller 1
3x0087	Air flow Slave controller 2	0	32767	0		Actual airflow slave controller 2
3x0088	Air flow Slave controller 3	0	32767	0		Actual airflow slave controller 3
3x0089	Air flow Slave controller 4	0	32767	0		Actual airflow slave controller 4
3x0090	Air flow Slave controller 5	0	32767	0		Actual airflow slave controller 5
3x0091	Air flow Slave controller 6	0	32767	0		Actual airflow slave controller 6
3x0092	Air flow Slave controller 7	0	32767	0		Actual airflow slave controller 7
3x0093	Air flow Slave controller 8	0	32767	0		Actual airflow slave controller 8
3x0094	Air flow Slave controller 9	0	32767	0		Actual airflow slave controller 9
3x0095	Air flow modbus sensor, lps * 10.	0	32767	0		Actual airflow from modbus sensor, lps*10
3x0096	Water cooling regulator signal.	0	10000	0		Actual water cooling signal (%)
3x0097	Water heating regulator signal.	0	10000	0		Actual water heating signal (%)
3x0098	Airflow demand signal	0	10000	0		Actual airflow demand signal
3x0099	Air flow set point master regulator	0	32767	0		Actual airflow setpoint master controller
3x0100	Pressure slave 1	-4000	25000	0		Actual pressure from slave 1
3x0101	Pressure slave 2	-4000	25000	0		Actual pressure from slave 2
3x0102	Pressure slave 3	-4000	25000	0		Actual pressure from slave 3
3x0103	Pressure slave 4	-4000	25000	0		Actual pressure from slave 4
3x0104	Pressure slave 5	-4000	25000	0		Actual pressure from slave 5
3x0105	Pressure slave 6	-4000	25000	0		Actual pressure from slave 6
3x0106	Pressure slave 7	-4000	25000	0		Actual pressure from slave 7
3x0107	Pressure slave 8	-4000	25000	0		Actual pressure from slave 8
3x0108	Pressure slave 9	-4000	25000	0		Actual pressure from slave 9
3x0109	Pressure duct	-4000	25000	0		Actual duct pressure
3x0110	Master min airflow	0	32767	0		Min airflow master
3x0111	Master max airflow	0	32767	0		Max airflow master
3x0112	VOC error status	-32768	32767	0		VOC error status
3x0113	Condensation input value	0	1000	10000		Actual condensation sensor value
3x0160	Min airflow	0	32767	0		Min airflow
3x0161	Max airflow	0	32767	0		Max airflow
3x0162	Minutes since last calibration	0	32767	5000		Actual minutes since last calibration
3x0163	Room temp measured	-5000	8000	2000		Actual measured rom temperature
3x0198	Simulated motor feedback	0	32767	0		Actual simulated motor feedback signal
3x0200	Uptime year	0	32767	0		Actual uptime years
3x0201	Uptime hours	0	8760	0		Actual uptime hours
3x0202	Uptime minutes	0	60	0		Actual uptime minutes
3x0203	VOC reboot counter	0	32767	0		VOC reboot counter
3x0204	VOC fault pending counter	0	32767	0		VOC fault pending counter

Holding						
ID	**Name**	**Min**	**Max**	**Init**	**Settings**	**Description**
4x0001	Component Name ID	19	19	19		Component Name ID
4x0002	Component name	-32768	32767	30547		Component name
4x0003	Component name	-32768	32767	26469		Component name
4x0004	Component name	-32768	32767	28271		Component name
4x0005	Component name	-32768	32767	21792		Component name
4x0006	Component name	-32768	32767	26990		Component name
4x0007	Component name	-32768	32767	28518		Component name
4x0008	Component name	-32768	32767	28018		Component name
4x0009	Component name	-32768	32767	21024		Component name
4x0010	Component name	-32768	32767	28527		Component name
4x0011	Component name	-32768	32767	8301		Component name
4x0012	Component name	-32768	32767	28483		Component name
4x0013	Component name	-32768	32767	29806		Component name
4x0014	Component name	-32768	32767	28530		Component name
4x0015	Component name	-32768	32767	27756		Component name
4x0016	Component name	-32768	32767	29285		Component name
4x0017	Component name	-32768	32767	12576		Component name
4x0018	Application ID	0	999	15		Controller application
4x0019	Controller modbus address	1	247	1		Controller Modbus ID
4x0020	Baud rate	0	2	2	0=9600, 1=19200, 2=38400	Communication setting: Modbus Baud rate
4x0021	Parity	0	2	2	0=Odd, 1=Even, 2=None	Communication setting: Modbus Parity
4x0022	Stop bits	1	2	1	1=1 Stop Bit, 2=2 Stop Bits	Communication setting: Slave unit Modbus ID
4x0023	Slave id	1	9	1		Communication setting: Slave unit Modbus ID
4x0024	Identification number	0	32767	0		Identification number
4x0025	Controller type	0	1	0	0=Master controller, 1=Slave controller	Controller type

Holding						
ID	**Name**	**Min**	**Max**	**Init**	**Settings**	**Description**
4x0026	App AO1	0	19	0	"0=Output not used, 1=Water cooling, 2=Water heating, 3=Water change over 2 pipe, 4=Water change over 4 pipe, 5=Water cooling primary sequence, 6=Water cooling secondary sequence, 7=Water heating primary sequence, 8=Water heating secondary sequence, 9=Discrete supply air, pulsed, 10=Discrete extract air, pulsed, 11=Discrete supply air, fixed on/off, 12=Discrete extract air, fixed on/off, 13=Power supply, 14=Continues supply air, 15=Continues extract air, 16=Flow demand supply air (for analogue outputs with no feedback), 17=Flow demand extract air (for analogue outputs with no feedback), 18=Supply air for Parasol adapt slaves, 19=Light control"	Operating Mode
4x0027	App AO2	0	19	0	"0=Output not used, 1=Water cooling, 2=Water heating, 3=Water change over 2 pipe, 4=Water change over 4 pipe, 5=Water cooling primary sequence, 6=Water cooling secondary sequence, 7=Water heating primary sequence, 8=Water heating secondary sequence, 9=Discrete supply air, pulsed, 10=Discrete extract air, pulsed, 11=Discrete supply air, fixed on/off, 12=Discrete extract air, fixed on/off, 13=Power supply, 14=Continues supply air, 15=Continues extract air, 16=Flow demand supply air (for analogue outputs with no feedback), 17=Flow demand extract air (for analogue outputs with no feedback), 18=Supply air for Parasol adapt slaves, 19=Light control"	Operating Mode
4x0028	App AO3	0	19	0	"0=Output not used, 1=Water cooling, 2=Water heating, 3=Water change over 2 pipe, 4=Water change over 4 pipe, 5=Water cooling primary sequence, 6=Water cooling secondary sequence, 7=Water heating primary sequence, 8=Water heating secondary sequence, 9=Discrete supply air, pulsed, 10=Discrete extract air, pulsed, 11=Discrete supply air, fixed on/off, 12=Discrete extract air, fixed on/off, 13=Power supply, 14=Continues supply air, 15=Continues extract air, 16=Flow demand supply air (for analogue outputs with no feedback), 17=Flow demand extract air (for analogue outputs with no feedback), 18=Supply air for Parasol adapt slaves, 19=Light control"	Operating Mode
4x0029	App DO1	0	19	0	"0=Output not used, 1=Water cooling, 2=Water heating, 3=Water change over 2 pipe, 4=Water change over 4 pipe, 5=Water cooling primary sequence, 6=Water cooling secondary sequence, 7=Water heating primary sequence, 8=Water heating secondary sequence, 9=Discrete supply air, pulsed, 10=Discrete extract air, pulsed, 11=Discrete supply air, fixed on/off, 12=Discrete extract air, fixed on/off, 13=Power supply, 14=Continues supply air, 15=Continues extract air, 16=Flow demand supply air (for analogue outputs with no feedback), 17=Flow demand extract air (for analogue outputs with no feedback), 18=Supply air for Parasol adapt slaves, 19=Light control"	Operating Mode

Holding						
ID	**Name**	**Min**	**Max**	**Init**	**Settings**	**Description**
4x0030	App DO2	0	19	0	"0=Output not used, 1=Water cooling, 2=Water heating, 3=Water change over 2 pipe, 4=Water change over 4 pipe, 5=Water cooling primary sequence, 6=Water cooling secondary sequence, 7=Water heating primary sequence, 8=Water heating secondary sequence, 9=Discrete supply air, pulsed, 10=Discrete extract air, pulsed, 11=Discrete supply air, fixed on/off, 12=Discrete extract air, fixed on/off, 13=Power supply, 14=Continues supply air, 15=Continues extract air, 16=Flow demand supply air (for analogue outputs with no feedback), 17=Flow demand extract air (for analogue outputs with no feedback), 18=Supply air for Parasol adapt slaves, 19=Light control"	Operating Mode
4x0031	App DO3	0	19	0	"0=Output not used, 1=Water cooling, 2=Water heating, 3=Water change over 2 pipe, 4=Water change over 4 pipe, 5=Water cooling primary sequence, 6=Water cooling secondary sequence, 7=Water heating primary sequence, 8=Water heating secondary sequence, 9=Discrete supply air, pulsed, 10=Discrete extract air, pulsed, 11=Discrete supply air, fixed on/off, 12=Discrete extract air, fixed on/off, 13=Power supply, 14=Continues supply air, 15=Continues extract air, 16=Flow demand supply air (for analogue outputs with no feedback), 17=Flow demand extract air (for analogue outputs with no feedback), 18=Supply air for Parasol adapt slaves, 19=Light control"	Operating Mode
4x0032	Input 1 usage	0	5	0	"0=Don't use external temperature sensor, 1=Use external temperature input for room temperature, 2=Use external temperature input for change over, 3=Use external temperature input for reading, no function, 4=Use input for window contact, normal open, 5=Use input for window contact, normal closed"	Input 1 configuration. Room temp, Change over temp, Read only temp or Window contact
4x0033	Input 3 usage	0	2	0	0=Not used, 1=CO2 sensor 0-10V, 2=CO2 sensor 2-10V	Input 3 configuration, Used for CO2 input
4x0034	Input 4 usage	0	6	0	0=Not used, 1=Keycard, normal open, 2=Keycard, normal closed, 3=Window contact, normal open, 4=Window contact, normal closed, 5=Change over, normal open, 6=Change over, normal closed	Input 4 configuration. Keycard switch, Window contact or Change over switch
4x0035	Room temperature sensor use.	0	3	0	"0=Use mean value of sensor module(s), 1=Use sensor module with ID 1, 2=Use external temperature input, 3=Use mean value of SM(s) and external sensor"	Defines witch temperature to use. Mean value from SM, SM ID0, External Temp, Mean of SM and Ext temp.
4x0036	Occ mode	0	2	0	0=Use occupancy sensor, 1=Always occupied, 2=Always unoccupied	Defines occupancy mode. Auto, Forced OCC or Forced UNOCC
4x0037	Occ off delay	60	3600	600		Occupancy off delay in s
4x0038	Occ on delay	1	600	30		Occupancy on delay in s
4x0039	Occupancy trig level	0	32767	20		Occupancy trig level

Holding						
ID	**Name**	**Min**	**Max**	**Init**	**Settings**	**Description**
4x0040	Commissioning mode.	0	516	0	0=Commissioning not active, 1=Min air flow unoccupied, 2=Min air flow occupied, 3=Max air flow, 4=Min air flow holiday, 256=Open cooling valve, 512=Open heating valve	Commisioning mode selection.
4x0041	Commissioning max time	0	5000	0		Max comissioning time in hours
4x0042	Set point Cool Occ	500	8000	2300		Cooling setpoint in occupancy mode (degrees celsius*100)
4x0043	Set point Heat Occ	500	8000	2100		Heating setpoint in occupancy mode (degrees celsius*100)
4x0044	Set point Cool UnOcc	500	8000	2400		Cooling setpoint in unoccupancy mode (degrees celsius*100)
4x0045	Set point Heat UnOcc	500	8000	2000		Heating setpoint in unoccupancy mode (degrees celsius*100)
4x0046	Set point Cool SNC	500	8000	2400		Cooling setpoint summer night cooling (degrees celsius*100)
4x0047	Set point Heat SNC	500	8000	1500		Heating setpoint summer night cooling (degrees celsius*100)

Holding						
ID	**Name**	**Min**	**Max**	**Init**	**Settings**	**Description**
4x0048	Set point Cool Holiday	500	8000	2500		Cooling setpoint in holiday mode (degrees celsius*100)
4x0049	Set point Heat Holiday	500	8000	1800		Heating setpoint in holiday mode (degrees celsius*100)
4x0050	Room temperature offset	-1000	1000	0		Room temp offset (Degrees celsius*100)
4x0051	SM SP offset step size	0	300	100		"Sensor module Offset step size (degrees celsius*100) Default 100 = 1 degree"
4x0052	Cooling boost delay	0	60	10		Two step cooling delay in minutes
4x0053	Heating boost delay	0	60	10		Two step heating delay in minutes
4x0054	Change over 2 act temp	0	8000	0		Actual Change over temp (degrees celsius*100)
4x0055	Heat type	0	1	0	0=Normal (water actuator), 1=Radiator	Defines heat type Water actuator or Radiator
4x0056	Air flow max	0	32767	2000		Configured max airflow in l/s*10
4x0057	Air flow min Occ	0	32767	150		Configured min occupancy airflow in l/s*10
4x0058	Air flow min UnOcc	0	32767	50		Configured min unoccupancy airflow in l/s*10
4x0059	Air flow min Holliday	0	32767	50		Configured min holiday airflow in l/s*10
4x0061	Air flow moving average time (hours).	0	24	1		Air flow moving average time (hours).
4x0062	Low pressure alarm limit	0	10000	0		Configured low pressure alarm limit in dpa
4x0063	Vent boost delay	0	200	72		Configured ventilation boost delay time in hours
4x0064	Vent boost time	0	60	5		Configured ventilation boost time in minutes
4x0065	Valve exercise interval	0	96	48		Configured valve exercise interval in hours
4x0066	Min pressure for cooling	0	30000	250		Configured minimum pressure to allow cooling in dpa
4x0067	Air cooling sequence	0	2	1	"0=Control temperature in three steps, air, water then air again, 1=Control temperature with air before water"	Defines cooling sequence Water-Air or Air-Water
4x0068	K-factor on damper short side	-32768	32767	0		K-factor short side ' 100
4x0069	K-factor on damper long side	-32768	32767	0		K-factor long side ' 100
4x0070	Heating P-band	0	1500	300		Regulator setting P-band heating (degrees*100)
4x0071	Cooling P-band	0	1500	300		Regulator setting P-band cooling (degrees*100)
4x0072	Heating I-time	0	1200	20		Regulator setting Heating I-time (minutes)
4x0073	Cooling I-time	0	1200	20		Regulator setting Cooling I-time (minutes)
4x0076	P-band airflow regulator	0	32767	800		Regulator setting Airflow P-band (l/s*10)
4x0077	I-time airflow regulator	0	32767	45		Regulator setting Airflow I-time (seconds)
4x0079	Change over 2 hyst temp	0	1000	500		Change over temperature hysteresis (Degrees*100)
4x0080	Change over 4 low limit	0	1000	550		CCO valve deadzone low limit (V*100)
4x0081	Change over 4 hi limit	0	1000	650		CCO valve deadzone high limit (V*100)
4x0082	Internal LED mode	0	1	1		Internal LED operation mode
4x0083	SM offset LED mode	0	2	2		Sensor module offset LED operation mode
4x0084	SM offset LED active	1	999	20		Sensor module offset LED activation
4x0085	SM LED brightness active	0	10000	10000		Configured led brightness on SM active state (%*100)
4x0086	SM LED brightness inactive	0	10000	2000		Configured led brightness on SM inactive state (%*100)
4x0088	Damper action emergency	0	1	0	0=Close damper, 1=Open damper	Damper emergency action mode
4x0089	Air quality low limit ppm	0	2000	600		CO2/VOC low limit ppm

Holding						
ID	**Name**	**Min**	**Max**	**Init**	**Settings**	**Description**
4x0090	Air quality high limit ppm	0	2000	1200		CO2/VOC high limit ppm
4x0091	PPM/V for CO2 or VOC analog sensor	0	1000	200		Configured ppm/v value from analog Co2/ VOC sensor
4x0092	VOC sensor use	0	1	1	0=VOC sensor not used, 1=VOC value used if sensor is present	VOC sensor mode. Off/Auto
4x0093	Low lim AO1	0	1000	200		Analog output 1 low limit (v*100)
4x0094	Hi lim AO1	0	1000	800		Analog output 1 high limit (v*100)
4x0095	Low lim AO2	0	1000	200		Analog output 2 low limit (v*100)
4x0096	Hi lim AO2	0	1000	1000		Analog output 2 high limit (v*100)
4x0097	Low lim AO3	0	1000	200		Analog output 3 low limit (v*100)
4x0098	Hi lim AO3	0	1000	700		Analog output 3 high limit (v*100)
4x0099	Coil mirror	-32768	32767	0		Coil mirror
4x0100	Modbus master delay time	1	500	1		Modbus master delay time
4x0101	Restore settings (write 1111)	0	32767	0		Restore settings (write 1111)
4x0102	Save settings (write 2222)	0	32767	0		Save settings (write 2222)
4x0103	Airflow demand min	0	32767	0		Configured min value airflow demand
4x0104	Airflow demand max	0	32767	0		Configured max value airflow demand
4x0105	EA offset	-10000	10000	0		Configured Extract air offset (%*100)
4x0106	Digital out 1 option	0	1	0	0=Output is normally open (default), 1=Output is normally closed. (Means inverted)	Used to configure function on Digital output 1
4x0107	Digital out 2 option	0	1	0	0=Output is normally open (default), 1=Output is normally closed. (Means inverted)	Used to configure function on Configuration output 2
4x0108	Digital out 3 option	0	1	0	0=Output is normally open (default), 1=Output is normally closed. (Means inverted)	Used to configure function on Digital output 3
4x0109	Analog out 1 option	0	1	0	0=Output is normally open (default), 1=Output is normally closed. (Means inverted)	Used to configure function on Analog output 1
4x0110	Analog out 2 option	0	1	0	0=Output is normally open (default), 1=Output is normally closed. (Means inverted)	Used to configure function on Analog output 2
4x0111	Analog out 3 option	0	1	0	0=Output is normally open (default), 1=Output is normally closed. (Means inverted)	Used to configure function on Analog output 3
4x0112	Ignore Occupancy SM (bit code)	0	1023	0		Ignore Occupancy sensor module (bit code)
4x0113	Slave air function	0	1	0	0=Slave is variable, 1=Slave is on/off	Slave air function
4x0114	Air-water-air break-point A	0	10000	3000		Cooling/Heating sequence breakpoint A (%*100)
4x0115	Air-water-air break-point B	0	10000	8000		Cooling/Heating sequence breakpoint B (%*100)
4x0116	Cold draft protection level	0	10000	3000		Cold draft protection level (%*100)
4x0117	Cold draft protection limit to turn off	0	10000	5000		Cold draft protection limit to stop (%*100)
4x0118	Actuator period time	60	1800	600		Defines Actuator PWM period time in seconds
4x0119	Condensation low trig level	0	1000	500		Condensation trig level (kOhm)
4x0120	Condensation hi trig level	0	1000	900		Condensation release level (kOhm)
4x0121	Room temp central	-5000	8000	0		Room temp central
4x0122	Reset timer tempera-ture offset	0	24	0		Temperature offset reset time (h)
4x0123	Continuous airflow type	0	2	0		Airflow regualtion mode
4x0124	Motor stroke time	1	1000	100		Defines motor stroke time (s)

Felsökning

Larmlista för VAV regulator (URC)

Larm nr.	Typ av alarm	Trolig orsak
Alarm 1	Supply voltage low	Låg matningsspänning, underdimesionerad trafo, spänningsfall i långa kablar. Risk för funktionsnedsättning.
Alarm 2	Supply voltage critical low	Se ovan, stor risk för funktionsnedsättning
Alarm 3	Ext temp missing	Tempgivare ej ansluten
Alarm 4	Ext temp error	Tempgivare trasig
Alarm 5	Condensation sensor error	Kondenssensor trasig
Alarm 6	SM temp sensor error	Tempsensor SM trasig
Alarm 7	SM button error	Tryckknapp SM trasig
Alarm 8	CO2 sensor missing	CO2 givare ej ansluten
Alarm 9	VOC Error	VOC givare, felaktigt värde
Alarm 10	Low pressure	Någon av tryckgivarna mäter ett tryck under det tillåtna
Alarm 17	SM comm error	Kommunikationsfel sensormodul, kolla adressering
Alarm 18	Slave comm error	Slavenehet ej ansluten
Alarm 19	Pressure sensor comm error	Kommunikationsfel tryckgivare, kolla adressering av tryckgivare
Alarm 20	VOC sensor comm error	VOC givare ej ansluten
Alarm 21	No master request (slave)	Slavenheten hittar ingen Master att förhålla sig till.
Alarm 22	Slave incompatible version	Programmvaruversion på slavenhet skiljer sig från den i masterenheten
Alarm 25	Heating comfort alarm	Rumsbörvärdet nås inte trots att utsignalen till värmeställdonet varit 100% i x min
Alarm 26	Cooling comfort alarm	Rumsbörvärdet nås inte trots att utsignalen till kylställdonet varit 100% i x min
Alarm 27	Temp. Set point overlap alarm	Överlappande setvärde för temperatur
Alarm 28	Air quality comfort alarm	Tillåtet PPM värde överskridet under x min
Alarm 29	Condensation	Kondenssensorn har slutit kretsen, kondensvatten eller kortslutning
Alarm 33	24 V Out 1 overload error	Överbelastad utgång
Alarm 34	24 V Out 2 overload error	Överbelastad utgång
Alarm 35	24 V Out 3 overload error	Överbelastad utgång
Alarm 41	Slave input sum alarm	Ingångslarm från slav enhet
Alarm 42	Slave output sum alarm	Utgångslarm från slav enhet